CITY OF ALBANY, OREGON
RAW WATER PUMP STATION
SAND REMOVAL IMPROVEMENTS

SEE ADDENDUM NO. 2 FOR CHANGES TO THESE DRAWINGS

VOLUME 2 OF 2
OCTOBER 2016

INDEX OF DRAWINGS

GENERAL

1	G-1	COVER SHEET
2	G-2	ABBREVIATIONS
3	G-3	SYMBOLS & LEGEND
4	G-4	GENERAL & EROSION CONTROL NOTES
5	G-5	DEMOLITION

CIVIL

6	C-1	SITE & EROSION CONTROL PLAN
7	C-2	GRADING PLAN & BUILDING SECTION
8	C-3	CIVIL DETAILS

ARCHITECTURAL

9	A-1	BUILDING ELEVATIONS
10	A-2	ARCHITECTURAL DETAILS
11	A-3	ARCHITECTURAL DETAILS

STRUCTURAL

12	S-1	GENERAL STRUCTURAL NOTES
13	S-2	SPECIAL INSPECTION SHEET
14	S-3	FOUNDATION PLAN & ROOF FRAMING PLAN
15	S-4	SECTIONS
16	S-5	STRUCTURAL DETAILS
17	S-6	STRUCTURAL DETAILS

MECHANICAL

18	M-1	MECHANICAL PLAN
19	M-2	MECHANICAL BUILDING SECTION
20	M-3	DEWATERING UNIT 2 SECTION VIEWS
21	M-4	DEWATERING UNIT 2 SECTION VIEW & DETAILS
22	M-5	DEWATERING UNIT 2 DETAILS

ELECTRICAL

23	E-1	ELECTRICAL COVER SHEET
24	E-2	ELECTRICAL ONE-LINE DIAGRAM
25	E-3	POWER & SIGNAL DEMOLITION PLAN
26	E-4	POWER, SIGNAL & LIGHTING PLAN
27	E-5	CONTROL SYSTEM INTERCONNECTION DIAGRAM
28	E-6	CIRCUIT & PANEL SCHEDULES

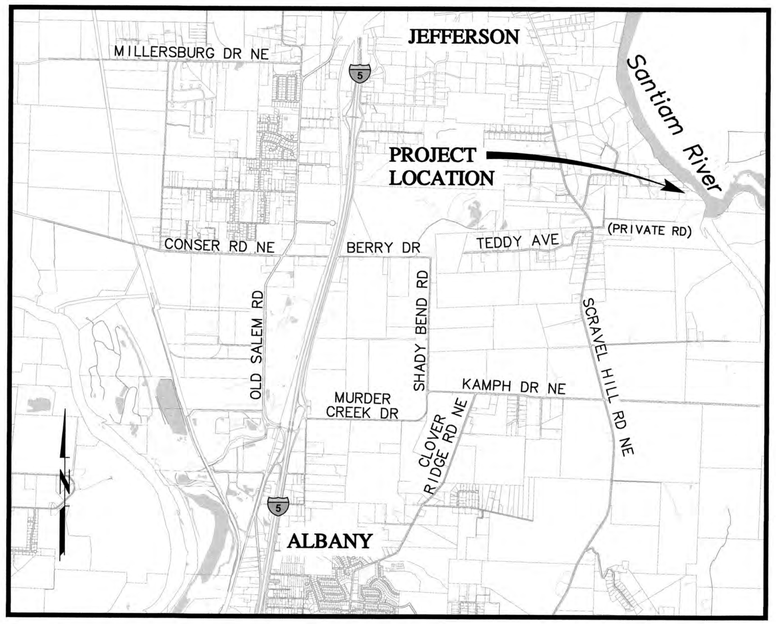

VICINITY MAP
SCALE: 1"=2,500'

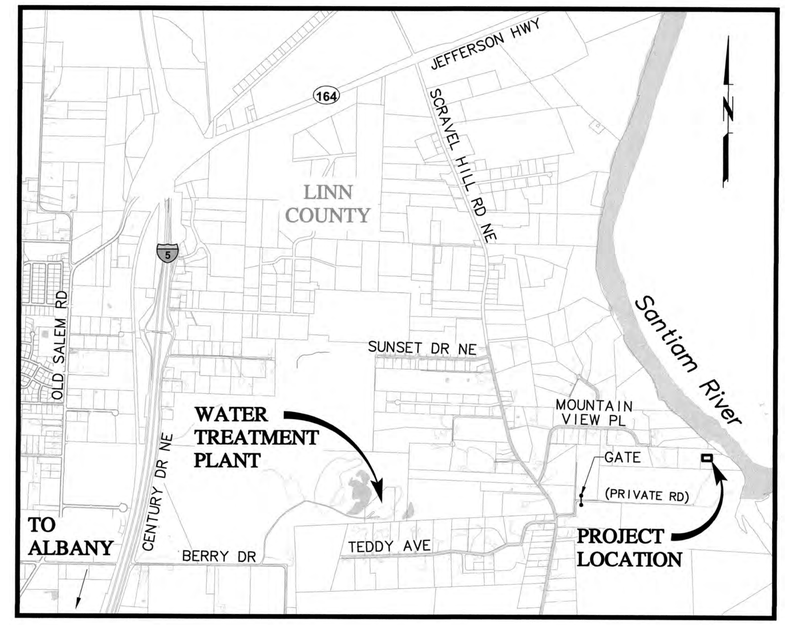

LOCATION MAP
SCALE: 1"=1,500'

MSA
Murray, Smith & Associates, Inc.
Engineers/Planners
888 S.W. 5th Ave, Suite 1170 PHONE 503-225-9010
Portland, Oregon 97204 FAX 866-274-9807

ATTENTION: OREGON LAW REQUIRES THE CONTRACTOR TO FOLLOW THE RULES ADOPTED BY THE OREGON UTILITY NOTIFICATION CENTER. THOSE RULES ARE SET FORTH IN OAR 952-001-0010 THROUGH OAR 952-001-0090. THE CONTRACTOR MAY OBTAIN COPIES OF THE RULES BY CALLING THE UTILITY NOTIFICATION CENTER. (NOTE: THE TELEPHONE NUMBER FOR THE OREGON UTILITY NOTIFICATION CENTER IS 503-246-6699.)

G:\PDX_Projects\12\1397\CAD\Sheets\12-1397-OR-G.dwg G-1 10/27/2016 8:56 AM RLF 20.0s (LMS Tech)

12-1397-0223

@	AT
AASHTO	AMERICAN ASSOCIATION OF STATE HIGHWAY & TRANSPORTATION OFFICIALS
AB	ANCHOR BOLT
ABAN (D)	ABANDON (ED)
ABS	ACRYLONITRILE BUTADIENE STYRENE
ABV	ABOVE
AC	ASPHALTIC CONCRETE
ACP	ASPHALTIC CONCRETE PAVING
ADJ	ADJUSTABLE
ADJC	ADJACENT
AFF	ABOVE FINISHED FLOOR
AFG	ABOVE FINISHED GRADE
AHR	ANCHOR
AL	ALUMINUM
ALT	ALTERNATE
AMP	AMPERE
ANSI	AMERICAN NATIONAL STANDARDS INSTITUTE
APPROX	APPROXIMATE
APPVD	APPROVED
APWA	AMERICAN PUBLIC WORKS ASSOCIATION
ARCH	ARCHITECTURAL
ARV	AIR RELEASE VALVE
ASCE	AMERICAN SOCIETY OF CIVIL ENGINEERS
ASSN	ASSOCIATION
ASSY	ASSEMBLY
ASTM	AMERICAN SOCIETY FOR TESTING & MATERIALS
ATM	ATMOSPHERE
AUTO	AUTOMATIC
AUX	AUXILIARY
AVE	AVENUE
AVG	AVERAGE
AWWA	AMERICAN WATER WORKS ASSOCIATION
B&S	BELL & SPIGOT
BC	BOLT CIRCLE
BD	BOARD
BETW	BETWEEN
BF	BOTH FACE
BFD	BACKFLOW PREVENTION DEVICE
BFILL	BACK FILL
BFV	BUTTERFLY VALVE
BHP	BRAKE HORSEPOWER
BKGD	BACKGROUND
BLDG	BUILDING
BLK	BLOCK
BLVD	BOULEVARD
BM	BENCHMARK / BEAM
BMP	BEST MANAGEMENT PRACTICE
BO	BLOWOFF
BOC	BACK OF CURB
BS	BOTH SIDES
BSMT	BASEMENT
BTF	BOTTOM FACE
BTU	BRITISH THERMAL UNIT
BV	BALL VALVE
BW	BOTH WAYS
C	CELSIUS
C TO C	CENTER TO CENTER
CARV	COMBINATION AIR RELEASE VALVE
CATV	CABLE TELEVISION
CB	CATCH BASIN
CCP	CONCRETE CYLINDER PIPE
CFH	CUBIC FEET PER HOUR
CFM	CUBIC FEET PER MINUTE
CFS	CUBIC FEET PER SECOND
CHAN	CHANNEL
CHEM	CHEMICAL
CHFR	CHAMFER
CHKV	CHECK VALVE
CI	CAST IRON
CIP	CAST IRON PIPE
CIPC	CAST IN PLACE CONCRETE
CISP	CAST IRON SOIL PIPE
CJ	CONSTRUCTION JOINT
CL or ℄	CENTER LINE
CL2	CHLORINE
CLG	CEILING
CLJ	CONTROL JOINT
CLR	CLEAR
CLSM	CONTROLLED LOW STRENGTH MATERIAL
CMP	CORRUGATED METAL PIPE
CMU	CONCRETE MASONRY UNIT
CND	CONDUIT
CO	CLEANOUT
COL	COLUMN
COMB	COMBINATION
CONC	CONCRETE
CONN	CONNECTION
CONST	CONSTRUCTION
CONT	CONTINUOUS / CONTINUATION
CONTR	CONTRACT (OR)
COORD	COORDINATE
COP	COPPER
CORP	CORPORATION
CORR	CORRUGATED
CP	CONTROL POINT
CPLG	COUPLING
CPVC	CHLORINATED POLYVINYL CHLORIDE
CR	CRUSHED ROCK
CS	COMBINED SEWER
CSP	CONCRETE SEWER PIPE
CT	COURT
CTR	CENTER
CU	CUBIC
CULV	CULVERT
CV	CONTROL VALVE
CW	CLOCKWISE / COLD WATER
CY	CUBIC YARDS
CYL	CYLINDER LOCK
D	DRAIN
DC	DIRECT CURRENT
DEFL	DEFLECTION
DET	DETAIL
DI	DUCTILE IRON
DIA	DIAMETER
DIM	DIMENSION
DIR	DIRECTION
DIST	DISTANCE
DN	DOWN
DR	DRIVE
DS	DOWNSPOUT
DWG	DRAWING
DWL	DOWEL
DWV	DRAIN WASTE AND VENT
DWY	DRIVEWAY
EA	EACH
ECC	ECCENTRIC
EF	EACH FACE
EL	ELEVATION
ELB	ELBOW
ELEC	ELECTRICAL
ENCL	ENCLOSURE
EOP	EDGE OF PAVEMENT
EQ	EQUAL
EQL SP	EQUALLY SPACED
EQUIP	EQUIPMENT
EW	EACH WAY
EXC	EXCAVATE
EXIST	EXISTING
EXIST GR	EXISTING GRADE
EXP	EXPANSION
EXP BT	EXPANSION BOLT
EXP JT	EXPANSION JOINT
EXT	EXTERIOR
F	FAHRENHEIT
F TO F	FACE TO FACE
FAB	FABRICATE
FB	FLAT BAR
FCA	FLANGED COUPLING ADAPTER
FCO	FLOOR CLEANOUT
FD	FLOOR DRAIN
FDN	FOUNDATION
FEXT	FIRE EXTINGUISHER
FF	FAR FACE
FGL	FIBERGLASS
FH	FIRE HYDRANT
FIN FL	FINISH FLOOR
FIN GR	FINISH GRADE
FIPT	FEMALE IRON PIPE THREAD
FITG	FITTING
FL	FLOOR LINE
FLEX	FLEXIBLE
FLG	FLANGE
FLL	FLOW LINE
FLR	FLOOR
FM	FORCE MAIN
FO	FIBER OPTIC
FOC	FACE OF CONCRETE
FOF	FACE OF FINISH
FOM	FACE OF MASONRY
FOS	FACE OF STUDS
FPM	FEET PER MINUTE
FPS	FEET PER SECOND
FRP	FIBERGLASS REINFORCED PLASTIC
FT	FEET / FOOT
FTG	FOOTING
FUT	FUTURE
FXTR	FIXTURE
G	GAS
GA	GAUGE
GAL	GALLON
GALV	GALVANIZED
GC	GROOVED COUPLING
GFA	GROOVED FLANGE ADAPTER
GI	GALVANIZED IRON
GIP	GALVANIZED IRON PIPE
GJ	GRIP JOINT
GL	GLASS
GLV	GLOBE VALVE
GND	GROUND
GPD	GALLONS PER DAY
GPH	GALLONS PER HOUR
GPM	GALLONS PER MINUTE
GPS	GALLONS PER SECOND
GR	GRADE
GR LN	GRADE LINE
GRTG	GRATING
GV	GATE VALVE
GRVL	GRAVEL
GYP	GYPSUM
HB	HOSE BIBB
HC	HOLLOW CORE
HDPE	HIGH DENSITY POLYETHYLENE
HDR	HEADER
HDWE	HARDWARE
HGR	HANGER
HGT	HEIGHT
HH	HANDHOLD
HM	HOLLOW METAL
HNDRL	HAND RAIL
HOA	HAND-OFF-AUTO
HOR	HAND-OFF-REMOTE
HORIZ	HORIZONTAL
HP	HIGH PRESSURE / HORSEPOWER
HPG	HIGH PRESSURE GAS
HPT	HIGH POINT
HR	HOUR
HSB	HIGH STRENGTH BOLT
HV	HOSE VALVE
HVAC	HEATING, VENTILATION, AIR CONDITIONING
HWL	HIGH WATER LINE
HWY	HIGHWAY
HYD	HYDRANT
HYDR	HYDRAULIC
I&C	INSTRUMENTATION & CONTROL
IAW	IN ACCORDANCE WITH
ID	INSIDE DIAMETER
IE	INVERT ELEVATION
IF	INSIDE FACE
IMPVT	IMPROVEMENT
IN	INCH
INCC	INCLUDE (D) (ING)
INFL	INFLUENT
INJ	INJECTION
INSTL	INSTALLATION / INSTALL
INSUL	INSULATION
INTER	INTERCEPTOR
INTR	INTERIOR
INV	INVERT
IP	IRON PIPE
IPT	IRON PIPE THREAD
IR	IRON ROD
IRRIG	IRRIGATION
JT	JOINT
JUNC	JUNCTION
KPL	KICK PLATE
KVA	KILOVOLT AMPERE
KW	KILOWATT
KWY	KEYWAY
L	LENGTH OF CURVE
LAB	LABORATORY
LAV	LAVATORY
LB	POUND
LF	LINEAL FOOT
LIN	LINEAL / LINEAR
LN	LANE
LOC	LOCATION
LONG	LONGITUDINAL
LP	LOW PRESSURE
LPT	LOW POINT
LRG	LARGE
LS	LONG SLEEVE / LUMP SUM
LT	LEFT
LVL	LEVEL
LWL	LOW WATER LINE
MAN	MANUAL
MATL	MATERIAL
MAX	MAXIMUM
MCC	MOTOR CONTROL CENTER
MCP	MASTER CONTROL PANEL
MECH	MECHANICAL
MET	METAL
MFR	MANUFACTURER
MGD	MILLION GALLONS PER DAY
MH	MANHOLE
MIN	MINIMUM
MIPT	MALE IRON PIPE THREAD
MISC	MISCELLANEOUS
MJ	MECHANICAL JOINT
MON	MONUMENT / MONOLITHIC
MOT	MOTOR
MP	MILEPOST
MSL	MEAN SEA LEVEL
MTD	MOUNTED
NA	NOT APPLICABLE
NC	NORMALLY CLOSED
NE	NORTHEAST
NF	NEAR FACE
NIC	NOT IN CONTRACT
NO / NO.	NORMALLY OPEN / NUMBER
NOM	NOMINAL
NORM	NORMAL
NRS	NON-RISING STEM
NTS	NOT TO SCALE
NW	NORTHWEST
O TO O	OUT TO OUT
OC	ON CENTER
OD	OUTSIDE DIAMETER
ODOT	OREGON DEPARTMENT OF TRANSPORTATION
OF	OVERFLOW / OUTSIDE FACE
OPNG	OPENING
OPP	OPPOSITE
ORIG	ORIGINAL
OVHD	OVERHEAD
P&ID	PROCESS & INSTRUMENTATION DIAGRAM
PC	POINT OF CURVE
PCC	POINT OF COMPOUND CURVE
PCVC	POINT OF CURVATURE ON VERTICAL CURVE
PE	PLAIN END
PERF	PERFORATED
PERM	PERMANENT
PERP	PERPENDICULAR
PG	PRESSURE GAUGE
PH	PIPE HANGER
PI	POINT OF INTERSECTION
PIVC	POINT OF INTERSECTION ON VERTICAL CURVE
PL or ℙ	PROPERTY LINE / PLATE / PLASTIC
PLBG	PLUMBING
PNL	PANEL
POC	POINT OF CURVATURE
POLY	POLYETHYLENE
POT	POINT OF TANGENCY
PP	POWER POLE
PRC	POINT OF REVERSE CURVATURE
PRCST	PRECAST
PREP	PREPARATION
PRESS	PRESSURE
PRKG	PARKING
PROP	PROPERTY
PRV	PRESSURE REDUCING VALVE
PS	PUMP STATION
PSIG	POUNDS PER SQUARE INCH GAGE
PSL	PIPE SLEEVE
PSPT	PIPE SUPPORT
PT	POINT OF TANGENCY
PTVC	POINT OF TANGENCY ON VERTICAL CURVE
PV	PLUG VALVE
PVC	POLYVINYL CHLORIDE
PVMT	PAVEMENT
PWR	POWER
QTY	QUANTITY
RAD	RADIUS
RC	REINFORCED CONCRETE
RCP	REINFORCED CONCRETE PIPE
RD	ROAD / ROOF DRAIN
RDCR	REDUCER
REF	REFERENCE
REINF	REINFORCE (D) (ING) (MENT)
REQ'D	REQUIRED
RESTR	RESTRAINED
RFCA	RESTRAINED FLANGE COUPLING ADAPTER
RM	ROOM
RND	ROUND
RO	ROUGH OPENING
ROW or R/W	RIGHT OF WAY
RPBPD	REDUCED PRESSURE BACKFLOW PREVENTION DEVICE
RPM	REVOLUTIONS PER MINUTE
RR	RAILROAD
RST	REINFORCING STEEL
RT	RIGHT
RW	RAW WATER
SALV	SALVAGE
SAN	SANITARY
SC	SOLID CORE
SCHED	SCHEDULE
SD	STORM DRAIN
SDL	SADDLE
SDR	STANDARD DIMENSION RATIO
SECT	SECTION
SHLDR	SHOULDER
SHT	SHEET
SIM	SIMILAR
SLP	SLOPE
SLV	SLEEVE
SN	SUPERNATANT
SOLN	SOLUTION
SP	SOIL PIPE / SEWER PIPE
SPCL	SPECIAL
SPEC (S)	SPECIFICATION (S)
SPG	SPACING
SPL	SPOOL
SPRT	SUPPORT
SQ	SQUARE
SQ FT	SQUARE FOOT
SQ IN	SQUARE INCH
SQ YD	SQUARE YARD
SS	SANITARY SEWER
SST	STAINLESS STEEL
ST	STREET
STA	STATION
STD	STANDARD
STL	STEEL
STOR	STORAGE
STR	STRAIGHT
STRUCT	STRUCTURE / STRUCTURAL
SUBMG	SUBMERGED
SUCT	SUCTION
SV	SOLENOID VALVE
S/W	SIDEWALK
SWD	SIDEWATER DEPTH
SWGR	SWITCH GEAR
SYMM	SYMMETRICAL
SYS	SYSTEM
T or TEL	TELEPHONE
T&B	TOP & BOTTOM
TAN	TANGENCY
TB	THRUST BLOCK
TBM	TEMPORARY BENCH MARK
TC	TOP OF CONCRETE / TOP OF CURB
TDH	TOTAL DYNAMIC HEAD
TEMP	TEMPERATURE / TEMPORARY
T&G	TONGUE & GROOVE
THK	THICKNESS
THRD	THREAD(ED)
THRU	THROUGH
TP	TEST PIT/TOP OF PAVEMENT/TURNING POINT
TRANS	TRANSITION
TSP	TRI-SODIUM PHOSPHATE
TST	TOP OF STEEL
TW	TOP OF WALL
TYP	TYPICAL
UG	UNDERGROUND
UH	UNIT HEATER
UN	UNION
UON	UNLESS OTHERWISE NOTED
USGS	UNITED STATES GEOLOGIC SURVEY
V	VENT / VOLT
VAC	VACUUM
VB	VACUUM BREAKER
VBOX	VALVE BOX
VC	VERTICAL CURVE
VERT	VERTICAL
VFD	VARIABLE FREQUENCY DRIVE
VOL	VOLUME
VCP	VITRIFIED CLAY PIPE
VTR	VENT THROUGH ROOF
W	WATER
W/	WITH
W/O	WITHOUT
W/W	WALL TO WALL
WD	WOOD
WF	WIDE FLANGE
WH	WALL HYDRANT
WHTR	WATER HEATER
WI	WROUGHT IRON
WM	WATER METER
WP	WORKING POINT / WATERPROOFING
WS	WATER SERVICE
WSDOT	WASHINGTON STATE DEPARTMENT OF TRANSPORTATION
WT	WEIGHT
WTP	WATER TREATMENT PLANT
WTRT	WATERTIGHT
WWF	WELDED WIRE FABRIC
WWTF	WASTEWATER TREATMENT FACILITY
WWTP	WASTEWATER TREATMENT PLANT
X SECT	CROSS SECTION
XFMR	TRANSFORMER
YD	YARD DRAIN/YARD
YH	YARD HYDRANT
YR	YEAR
ZN	ZINC

NO.	DATE	BY	REVISION

NOTICE

0 ½ 1

IF THIS BAR DOES NOT MEASURE 1" THEN DRAWING IS NOT TO SCALE

AS DESIGNED
RLF DRAWN
MLH CHECKED

REGISTERED PROFESSIONAL ENGINEER 19195 OREGON JULY 15, 1997 MATTHEW L. HICKEY
RENEWS 6-30-17

MSA Murray, Smith & Associates, Inc. Engineers/Planners
888 S.W. 5th Ave, Suite 1170 Portland, Oregon 97204
PHONE 503-225-9010 FAX 866-274-9807

CITY OF Albany

CITY OF ALBANY, OREGON RAW WATER PUMP STATION SAND REMOVAL IMPROVEMENTS

ABBREVIATIONS

PROJECT NO.: 12-1397.223 | SCALE: AS SHOWN | DATE: OCTOBER 2016

SHEET G-2

G:\PDX_Projects\12\1397\CAD\Sheets\12-1397-OR-G.dwg G-2 10/27/2016 8:56 AM RLF 20.0s (LMS Tech)

PIPE SYMBOLS

PLANT	SCHEMATIC	
		WELDED JOINT
		FLANGED JOINT
		GROOVED END JOINT
		MECHANICAL JOINT
		PUSH-ON JOINT (RUBBER GASKET)
		FLANGED COUPLING ADAPTER
		DOUBLE BALL FLEXIBLE EXTENSION COUPLING
		FLEXIBLE COUPLING W/ THRUST RING
		ELBOW UP
		ELBOW DOWN
		TEE UP
		TEE DOWN
		LATERAL UP
		LATERAL DOWN
		CONCENTRIC REDUCER
		ECCENTRIC REDUCER
		UNION
		BLIND FLANGE
		CAP
		LONG SLEEVE
		FLEXIBLE COUPLING
		CAPPED END OR PLUGGED END
		FITTING

VALVE SYMBOLS

PLANT	SCHEMATIC	
		BUTTERFLY VALVE
		GATE VALVE
		GLOBE VALVE
		BALL VALVE
		BALANCING VALVE
		DIAPHRAGM VALVE
		PLUG VALVE (TOP)
		PLUG VALVE (SIDE)
		3-WAY PLUG VALVE
		SWING CHECK VALVE
		DOUBLE CHECK ASSEMBLY
		BALL SWING CHECK
		SILENT CHECK VALVE
		PRESSURE REDUCING VALVE
		ALTITUDE CONTROL VALVE
		SOLENOID VALVE
		RELIEF VALVE
		NEEDLE VALVE
		PINCH VALVE
		HOSE VALVE
		HOSE BIBB

TOPOGRAPHIC LEGEND

	EXISTING	PROPOSED
WATERLINE	10"W	12" DI W
ELECTRICITY	E	E
GAS	4"G	4"G
TELEPHONE/TELEMETRY	T	T
CABLE TELEVISION	CATV	CATV
SANITARY SEWER LINE	8"SS	8"SS
SANITARY SEWER FORCE MAIN	6"FM	6"FM
STORM DRAIN	8"SD	8"SD
CULVERT		18"D
ABANDON PIPE		
DRAINAGE DITCH		
BARBWIRE FENCE		
CHAIN LINK FENCE		
TEMPORARY SILT FENCE		
GUARDRAIL		
ROCK WALL		
TREE/BUSH LINE		
CENTERLINE		
EASEMENT/PROPERTY LINE		
RIGHT-OF-WAY		
EDGE OF PAVEMENT/AC		
EDGE OF GRAVEL		
CURB		
SIDEWALK	S/W	S/W
STRUCTURE OR FACILITY		
CONTOUR MINOR		
CONTOUR MAJOR	200	200
MANHOLE		
CLEAN-OUT		
CATCH BASIN/FIELD INLET		
THRUST BLOCK		
VALVE		
AIR INJECTION ASSEMBLY		
BLOW-OFF ASSEMBLY		
AIR RELEASE ASSEMBLY		
FIRE HYDRANT ASSEMBLY		
WATER METER		
PULL BOX/JUNCTION BOX		
UTILITY POLE		
GUY WIRE		
LIGHT POST		
MAILBOX		
SIGN		
BENCHMARK		
TREE DECIDUOUS		
TREE CONIFEROUS		
TREE TO BE REMOVED		
SURFACE ELEVATION	+ 176.63	+ 176.63

SECTION AND DETAIL DESIGNATIONS

SECTION DESIGNATIONS

SECTION LETTER DESIGNATION

A

2

SHEET WHERE SECTION IS SHOWN *

SECTION
SCALE:

SECTION LETTER DESIGNATION

A

2

SHEET FROM WHICH SECTION IS TAKEN *

DETAIL DESIGNATIONS

DETAIL
SCALE:

DETAIL NUMBER

2

2

SHEET FROM WHICH DETAIL IS TAKEN *

* NOTE: IF PLAN AND SECTION FOR DETAIL CALL-OUT AND DETAIL ARE SHOWN ON THE SAME DRAWING, DRAWING NUMBER IS REPLACED WITH A DASH.

MISCELLANEOUS PIPING SYMBOLS

	STRAINER
	SIGHT GLASS
	PRESSURE GAUGE W/ COCK
	PRESSURE SWITCH W/ COCK
M	METER
SP	SLIP-ON JOINT PIPE
R	RESTRAINED JOINT PIPE

NO.	DATE	BY	REVISION

NOTICE

0 ½ 1

IF THIS BAR DOES NOT MEASURE 1" THEN DRAWING IS NOT TO SCALE

AS
DESIGNED
RLF
DRAWN
MLH
CHECKED

REGISTERED PROFESSIONAL ENGINEER 19195 OREGON JULY 15, 1997 MATTHEW L. HICKEY
RENEWS 6-30-17

MSA Murray, Smith & Associates, Inc.
Engineers/Planners
888 S.W. 5th Ave, Suite 1170 PHONE 503-225-9010
Portland, Oregon 97204 FAX 866-274-9807

CITY OF ALBANY, OREGON
RAW WATER PUMP STATION SAND REMOVAL IMPROVEMENTS

SYMBOLS & LEGEND

PROJECT NO.: 12-1397.223 | SCALE: AS SHOWN | DATE: OCTOBER 2016

SHEET
G-3
3 of 28

G:\PDX_Projects\12\1397\CAD\Sheets\12-1397-OR-G.dwg G-3 10/27/2016 8:56 AM RLF 20.0s (LMS Tech)

GENERAL NOTES

1. THE CONTRACTOR SHALL POTHOLE AND VERIFY LOCATIONS, ELEVATIONS, TYPES AND SIZES OF ALL EXISTING UTILITIES PRIOR TO CONSTRUCTION. POTHOLING SHALL SUFFICIENTLY PRECEDE THE WORK TO ALLOW REQUIRED ELEVATION ADJUSTMENTS TO BE ACCOMPLISHED WITHOUT REWORK. ELEVATION ADJUSTMENTS SHALL BE EXPECTED AND ARE INCIDENTAL TO THE WORK.

2. SEE SPECIFICATIONS FOR APPROVED TYPES OF PIPE RESTRAINT FOR PRESSURE PIPE.

3. BORE HOLES ARE REFERENCED IN THE GEOTECHNICAL INVESTIGATION REPORT. THIS REPORT IS INCLUDED AS SUPPLEMENTARY INFORMATION AND IS FOR CONTRACTOR REFERENCE ONLY AND IS NOT A PART OF THE CONTRACT DOCUMENTS.

4. SEE SPECIAL PROVISIONS OF SPECIFICATIONS FOR SPECIAL CONSTRUCTION SCHEDULING REQUIREMENTS.

5. ALL CONCRETE SHALL BE A MINIMUM OF 3000 PSI STRENGTH UNLESS NOTED OTHERWISE, SEE STRUCTURAL REQUIREMENTS.

6. LOCATIONS OF EXISTING UTILITIES ARE BASED ON INFORMATION SUPPLIED BY THE UTILITIES AND SHALL BE CONSIDERED AS APPROXIMATE ONLY. AS REQUIRED BY STATE LAW, THE CONTRACTOR SHALL OBTAIN UTILITY LOCATES PRIOR TO COMMENCING CONSTRUCTION.

7. ALL PRESSURE PIPING SHALL BE TESTED UNDER A HYDROSTATIC TEST PRESSURE OF 150 PERCENT THE DESIGN PRESSURE, BUT NOT LESS THAN 150 PSI (+- 5 PSI). SEE SPECIFICATIONS.

8. ALL EXISTING FEATURES INCLUDING BUT NOT LIMITED TO ROADWAYS, STRUCTURES, LOTS, CURBS, SIDEWALKS, FENCES, WALLS, PLANTING, DITCHES, MAILBOXES, SIGNS, PIPING AND UTILITIES DISTURBED DURING CONSTRUCTION SHALL BE RESTORED TO AS GOOD OR BETTER THAN EXISTING CONDITION AS DETERMINED BY THE OWNER. CONTRACTOR SHALL REPAIR ALL UTILITY SERVICES DAMAGED DURING CONSTRUCTION AND SUCH REPAIR SHALL BE CONSIDERED INCIDENTAL UNLESS PROVIDED FOR OTHERWISE IN THE SPECIFICATIONS.

9. CONTRACTOR TO OBTAIN AND COMPLY WITH LINN COUNTY AND CITY OF ALBANY PERMITS AND REQUIREMENTS FOR WORK IN, AND RESTORATION OF THE PROJECT SITE.

10. DO NOT REMOVE TREES UNLESS THEY HAVE BEEN PREVIOUSLY IDENTIFIED IN THE FIELD FOR REMOVAL PER ENGINEER.

11. FINAL LOCATIONS OF ALL NEW FACILITIES SHALL BE FIELD VERIFIED WITH ENGINEER PRIOR TO CONSTRUCTION.

12. PROVIDE "AS CONSTRUCTED" DRAWINGS TO THE ENGINEER INDICATING ALL CHANGES IN GRADE, ALIGNMENT, FITTINGS AND MATERIALS INSTALLED AND ANY OTHER UTILITIES OR OBSTACLES NOT SO INDICATED ON THESE PLANS.

13. AT THE END OF EACH WORKDAY ALL OPEN TRENCHES SHALL BE BACKFILLED OR OTHERWISE PROTECTED TO THE SATISFACTION OF THE ENGINEER.

14. CONTRACTOR SHALL BE RESPONSIBLE FOR PROTECTING CONSTRUCTION SURVEYS. PRIOR TO CONSTRUCTION, FIELD LAYOUT SHALL BE APPROVED BY ENGINEER. SEE CONTRACT DOCUMENTS FOR SURVEY REQUIREMENTS.

15. ATTENTION: OREGON LAW REQUIRES THE CONTRACTOR TO FOLLOW THE RULES ADOPTED BY THE OREGON UTILITY NOTIFICATION CENTER. THOSE RULES ARE SET FORTH IN OAR 952-001-0010 THROUGH OAR 952-001-0090. THE CONTRACTOR MAY OBTAIN COPIES OF THE RULES BY CALLING THE UTILITY NOTIFICATION CENTER. (NOTE: THE TELEPHONE NUMBER FOR THE OREGON UTILITY NOTIFICATION CENTER IS 1-800-332-2344).

16. CONTRACTOR SHALL PROVIDE ENGINEER WITH MINIMUM 24 HOURS NOTICE WHEN POTHOLING WILL BE COMPLETED. ENGINEER WILL BE ON SITE DURING POTHOLING TO COORDINATE WITH CONTRACTOR TO REVIEW UTILITY INVESTIGATIONS AND ASSIST CONTRACTOR IN MAKING APPROPRIATE ADJUSTMENTS FOR ANY ALIGNMENT CONFLICTS WHERE CONNECTING TO EXISTING UTILITIES.

17. CONTRACTOR SHALL SUPPORT AND PROTECT AS NECESSARY ANY PIPE OR CONDUIT EXPOSED AS PART OF THE NEW WORK. CONTRACTOR SHALL MAINTAIN ALL EXISTING UTILITIES IN SERVICE AT ALL TIMES AND SHALL COORDINATE WITH RESPECTIVE UTILITY COMPANIES TO MAINTAIN AND PROTECT SERVICES.

18. PRE-CONSTRUCTION SURVEY-PRIOR TO BEGINNING THE WORK, THE CONTRACTOR SHALL, WITH THE OWNER, DOCUMENT THE PRE-CONSTRUCTION CONDITION OF THE FACILITY BY PHOTOGRAPH AND/OR VIDEO TO ESTABLISH THE EXPECTED LEVEL OF CLEANLINESS BY WHICH THE CONTRACTORS WORK WITH BE JUDGED. SEE SPECIFICATION SECTION 01100, SPECIAL TECHNICAL PROVISIONS.

19. ALL FABRICATED STEEL SHALL BE HOT DIPPED GALVANIZED UNLESS OTHERWISE NOTED.

EROSION CONTROL NOTES

1. CONTRACTOR SHALL INSTALL AND MAINTAIN EROSION/SEDIMENT CONTROL DURING CONSTRUCTION (ANY TIME OF YEAR) IN ACCORDANCE WITH LINN COUNTY, DEQ AND OTHER APPLICABLE AGENCY REQUIREMENTS.

2. THE IMPLEMENTATION OF ANY REQUIRED EROSION/SEDIMENT CONTROL (ESC) PLANS AND THE CONSTRUCTION, MAINTENANCE, REPLACEMENT, AND UPGRADING OF THESE ESC FACILITIES IS THE RESPONSIBILITY OF THE CONTRACTOR UNTIL ALL CONSTRUCTION IS COMPLETED AND APPROVED AND VEGETATION/LANDSCAPING IS ESTABLISHED.

3. INSTALL FILTER FENCE (SEDIMENT FENCE) ALONG BOUNDARY OF CLEARING AND OTHER AREAS AS REQUIRED.

4. ESC FACILITIES MUST BE CONSTRUCTED IN CONJUNCTION WITH ALL CLEARING AND GRADING ACTIVITIES, AND IN SUCH A MANNER AS TO ENSURE THAT SEDIMENT AND SEDIMENT LADEN WATER DO NOT ENTER THE DRAINAGE SYSTEM, WATERWAYS, ROADWAYS, OR VIOLATE APPLICABLE WATER QUALITY STANDARDS.

5. THE ESC FACILITIES SHALL BE INSPECTED DAILY BY THE CONTRACTOR AND MAINTAINED AS NECESSARY TO ENSURE THEIR CONTINUED FUNCTIONING. THE ESC FACILITIES ON INACTIVE SITES SHALL BE INSPECTED AND MAINTAINED A MINIMUM OF ONCE A MONTH OR WITHIN 24 HOURS FOLLOWING A STORM EVENT.

6. BIOFILTER BAGS SHALL BE PLACED AROUND INLETS AND ALONG DITCHES THROUGHOUT THE PROJECT TO FILTER SEDIMENT. BIOFILTER BAGS ARE TO BE CHECKED AND MAINTAINED DAILY AND REPLACED AS NEEDED.

7. ALL OFF-ROAD AREAS WITHIN THE PROJECT USED FOR CONSTRUCTION TRAFFIC SHALL BE PROTECTED WITH A GRAVEL CONSTRUCTION ENTRANCE AND WHEEL WASH AS NECESSARY TO KEEP ALL SEDIMENT OFF TRAVELED ROADWAYS.

8. UPON COMPLETION OF CONSTRUCTION AND AFTER VEGETATION/LANDSCAPING HAS BEEN ESTABLISHED, CONTRACTOR TO REMOVE SILT FENCING, BIOFILTER BAGS AND OTHER EROSION CONTROL MEASURES.

9. CONTRACTOR TO DELINEATE ALL WETLAND AREAS WITH ORANGE SEDIMENT FENCING PRIOR TO ANY CONSTRUCTION ACTIVITIES IN THE VICINITY OF THESE AREAS.

SURVEY NOTE

1. THE LOCATION AND DESCRIPTION OF EXISTING UTILITIES AND FEATURES SHOWN ON THE PLANS ARE COMPILED FROM RECORD DRAWINGS AND A FIELD SURVEY. THE CONTRACTOR SHALL VERIFY THE LOCATION OF ALL UTILITIES PRIOR TO CONSTRUCTION.

DESIGN CRITERIA

RAW WATER SAND REMOVAL (EXISTING)	
SAND PUMPS, TYPE	HORIZONTAL CENTRIFUGAL
NUMBER	2
SAND PUMP CAPACITY, GPM PER PUMP	220
SAND PUMP MOTOR HORSEPOWER, HP	15
SAND CLASSIFIER TYPE	SHAFTLESS SPIRAL SCREW
SPIRAL SCREW MOTOR, HP	0.5

RAW WATER SAND REMOVAL (NEW)	
MAX PUMP FLOW TO HYDROCYCLONE, GPM	250
REQD CYCLONE INLET PRESSURE, PSI	5-8
CYCLONE UNDERFLOW RATE, GPM	20-30
SOLIDS CAPACITY, CFH	25
SAND CLASSIFIER TYPE	SHAFTLESS SPIRAL SCREW
SPIRAL SCREW MOTOR, HP	0.5

NO.	DATE	BY	REVISION

NOTICE
0 ½ 1
IF THIS BAR DOES NOT MEASURE 1" THEN DRAWING IS NOT TO SCALE

AS DESIGNED
RLF/BAW DRAWN
MLH CHECKED

REGISTERED PROFESSIONAL ENGINEER 19195 OREGON JULY 15, 1987 MATTHEW L. HICKEY
RENEWS 6-30-17

MSA Murray, Smith & Associates, Inc. Engineers/Planners
888 S.W. 5th Ave, Suite 1170 Portland, Oregon 97204
PHONE 503-225-9010 FAX 866-274-9807

CITY OF ALBANY, OREGON
RAW WATER PUMP STATION SAND REMOVAL IMPROVEMENTS

GENERAL & EROSION CONTROL NOTES

PROJECT NO.: 12-1397.223 | SCALE: AS SHOWN | DATE: OCTOBER 2016

SHEET G-4

G:\PDX_Projects\12\1397\CAD\Sheets\12-1397-OR-G.dwg G-4 10/27/2016 8:56 AM RLF 20.0s (LMS Tech)

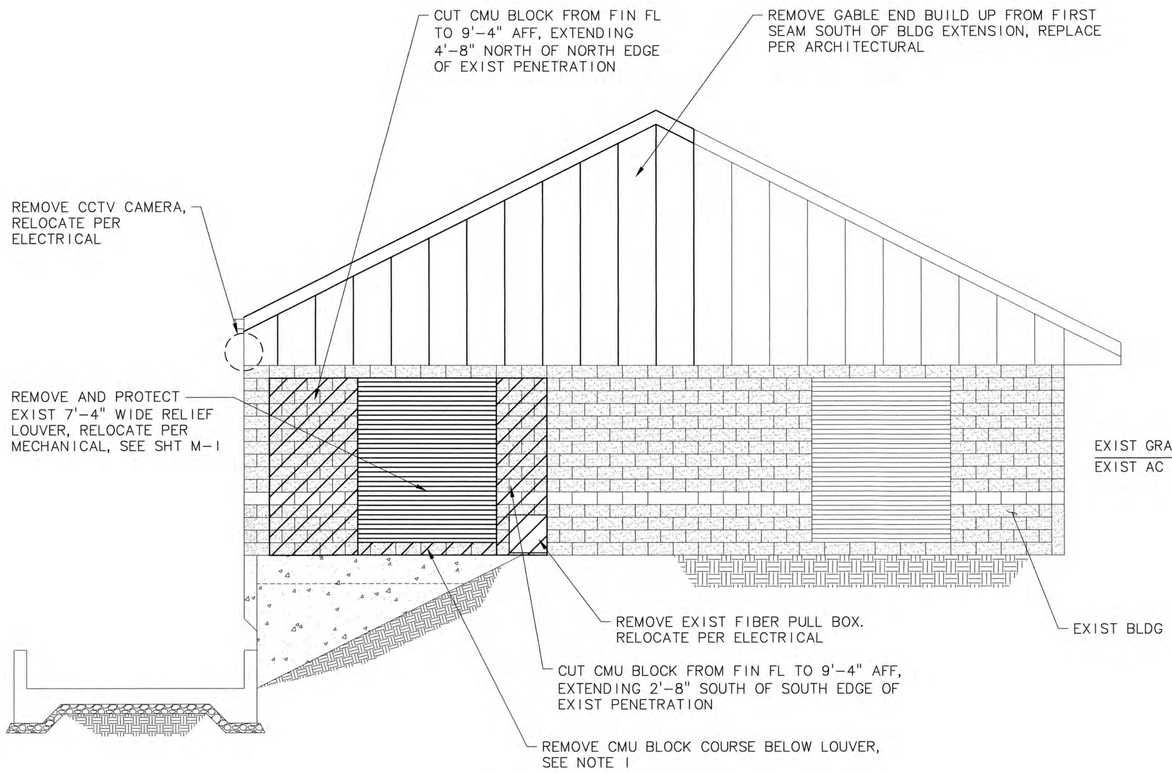

WEST ELEVATION (1/–)
SCALE: 1/4"=1'-0"

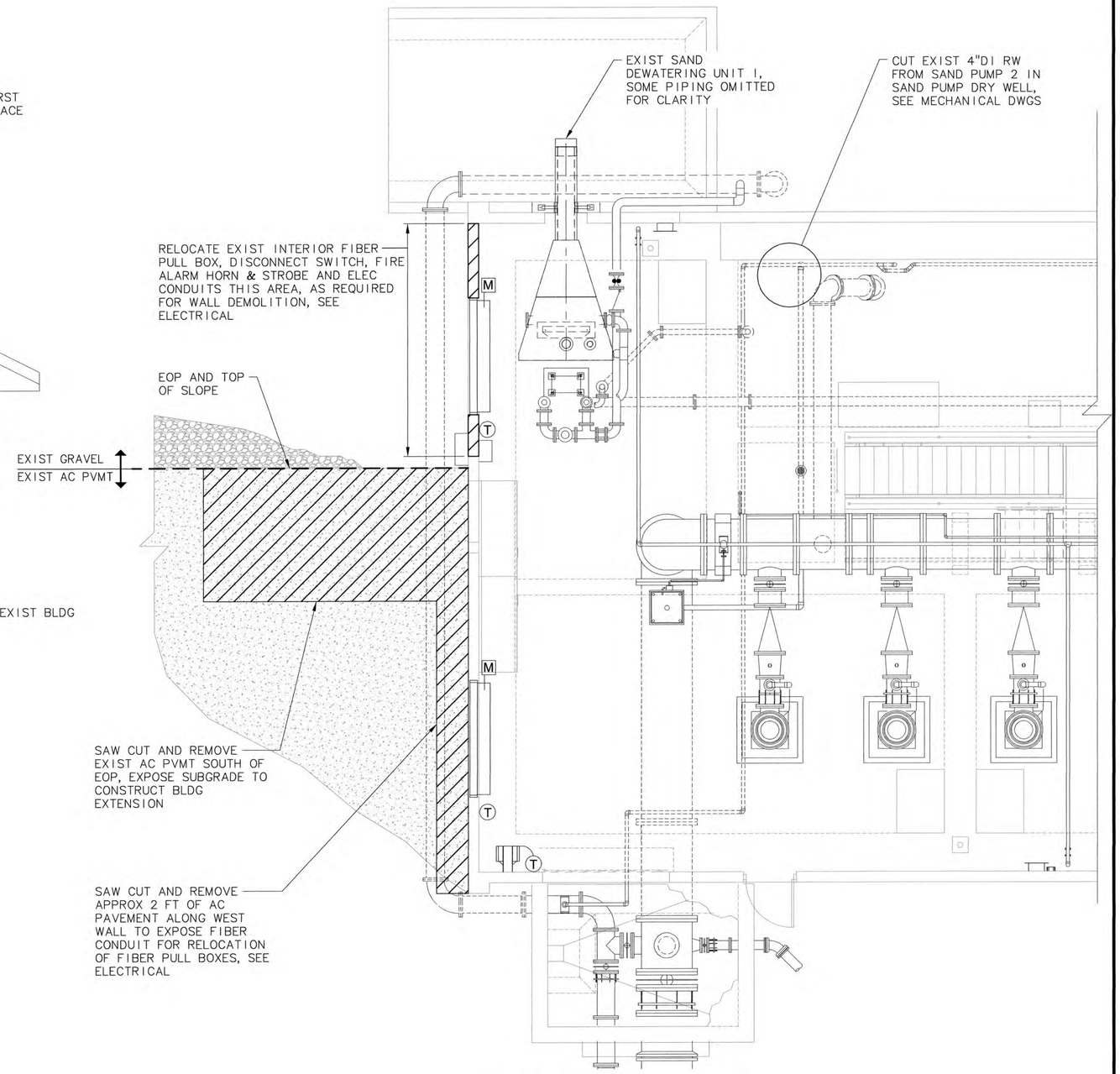

PLAN VIEW (2/–)
SCALE: 1/4"=1'-0"

SHEET NOTES:

1. REPAIR EXISTING CONCRETE SLAB WHERE CMU BLOCK IS CUT TO PROVIDE A SMOOTH TRANSITION TO NEW SLAB WITH NO TRIPPING HAZARD.

2. PROTECT EXISTING MECHANICAL AND ELECTRICAL EQUIPMENT INSIDE BUILDING FROM DUST/DEBRIS RESULTING FROM DEMOLITION ACTIVITIES. SEE TECHNICAL SPECIFICATIONS, SECTION 01100, SPECIAL TECHNICAL PROVISIONS.

NO.	DATE	BY	REVISION

NOTICE
0 ½ 1
IF THIS BAR DOES NOT MEASURE 1" THEN DRAWING IS NOT TO SCALE

AS DESIGNED
RLF/BAW DRAWN
MLH CHECKED

REGISTERED PROFESSIONAL ENGINEER 19195 OREGON JULY 15, 1997 MATTHEW L. HICKEY
RENEWS 6-30-17

MSA Murray, Smith & Associates, Inc. Engineers/Planners
888 S.W. 5th Ave, Suite 1170 Portland, Oregon 97204
PHONE 503-225-9010 FAX 866-274-9807

CITY OF ALBANY, OREGON
RAW WATER PUMP STATION SAND REMOVAL IMPROVEMENTS

DEMOLITION

PROJECT NO.: 12-1397.223 | SCALE: AS SHOWN | DATE: OCTOBER 2016

SHEET G-5
5 of 28

G:\PDX_Projects\12\1397\CAD\Sheets\12-1397-OR-G-5.dwg G-5 10/27/2016 12:00 PM RLF 20.0s (LMS Tech)

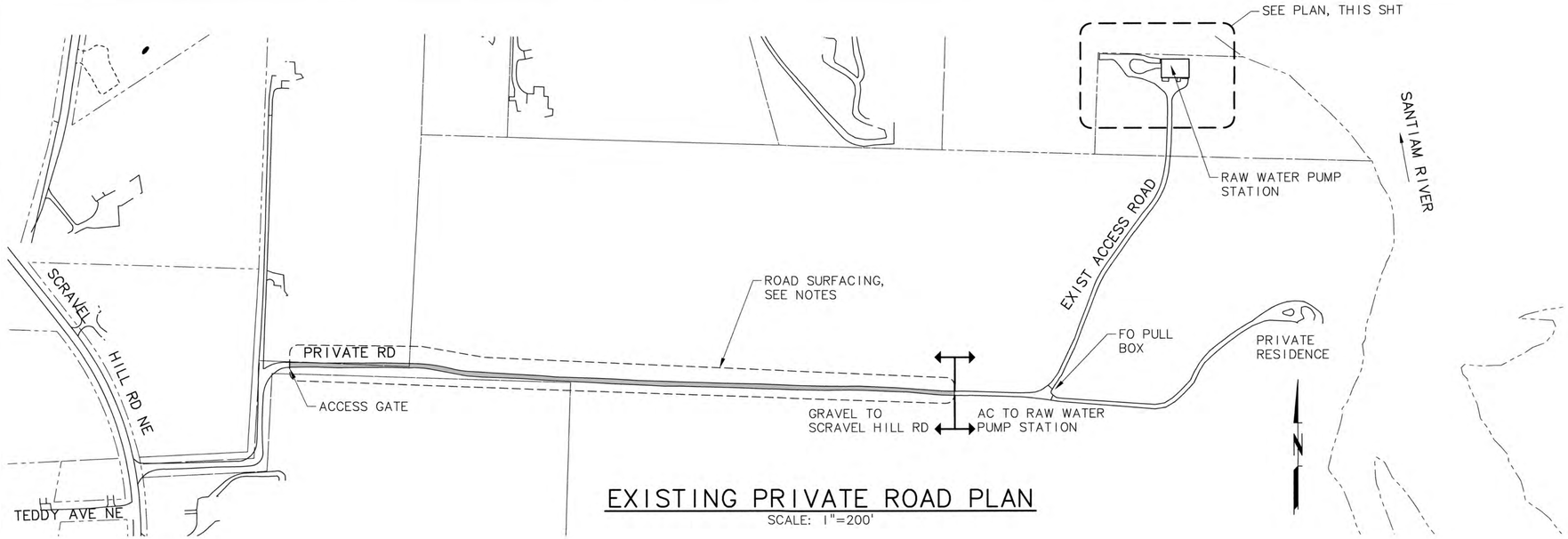

EXISTING PRIVATE ROAD PLAN

SCALE: 1"=200'

NOTE:

1. GRAVEL SECTION OF EXISTING PRIVATE ROAD TO RAW WATER PUMP STATION SHALL BE RESURFACED WITH ROCK SURFACING AT THE DIRECTION OF THE ENGINEER AFTER CONSTRUCTION IS COMPLETE.

2. EXISTING PRIVATE ROAD IS GRAVEL FOR APPROXIMATELY 2,000 FEET FROM SCRAVEL HILL ROAD TO AC SURFACING. WIDTH IS APPROXIMATELY 12 FEET.

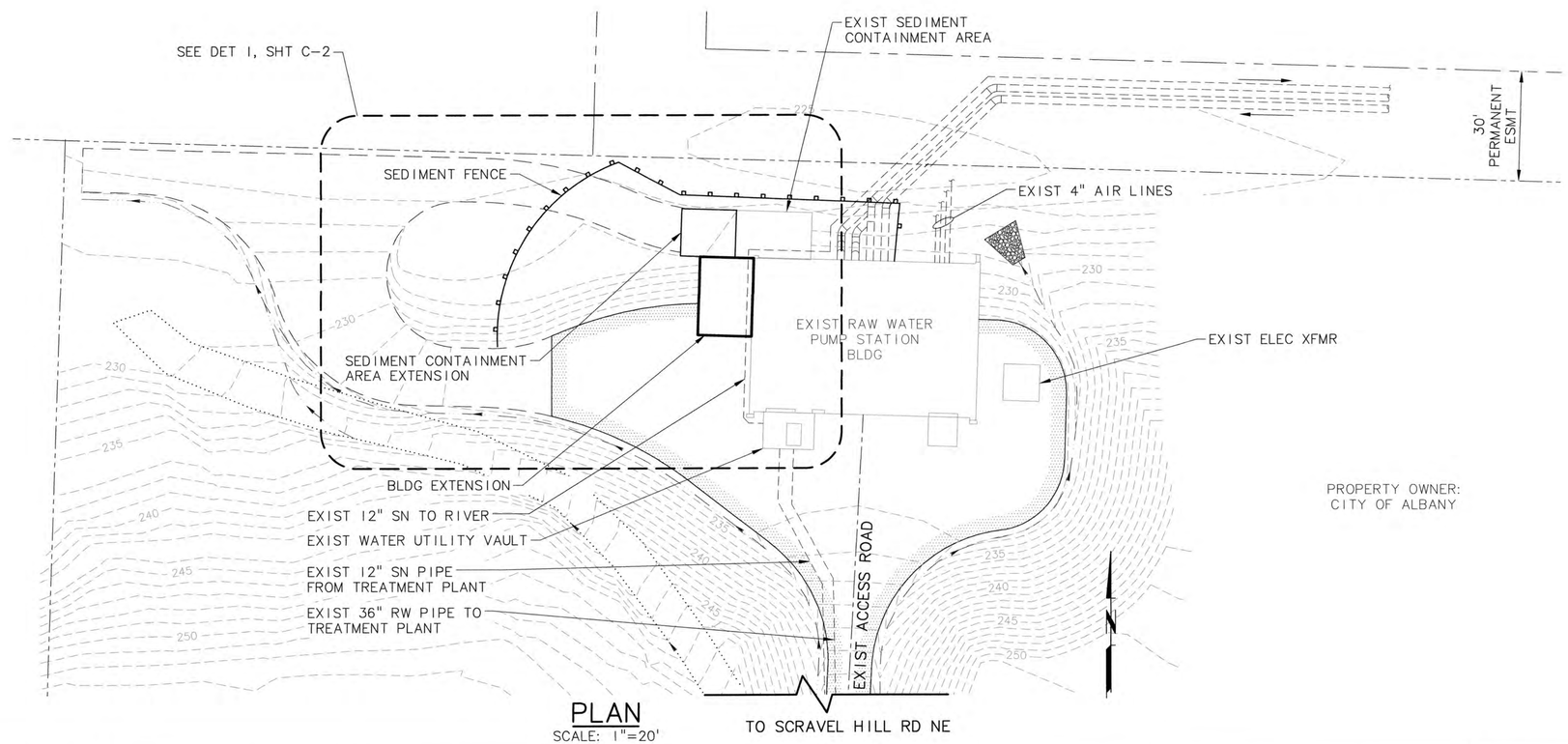

PLAN

SCALE: 1"=20'

NO.	DATE	BY	REVISION

NOTICE
0 ½ 1
IF THIS BAR DOES NOT MEASURE 1" THEN DRAWING IS NOT TO SCALE

AS DESIGNED
RLF/BAW DRAWN
MLH CHECKED

REGISTERED PROFESSIONAL ENGINEER 19195 OREGON JULY 15, 1997 MATTHEW L. HICKEY
RENEWS 6-30-17

MSA Murray, Smith & Associates, Inc. Engineers/Planners
888 S.W. 5th Ave, Suite 1170 Portland, Oregon 97204 PHONE 503-225-9010 FAX 866-274-9807

CITY OF ALBANY, OREGON
RAW WATER PUMP STATION SAND REMOVAL IMPROVEMENTS

SITE & EROSION CONTROL PLAN

PROJECT NO.: 12-1397.223 | SCALE: AS SHOWN | DATE: OCTOBER 2016

SHEET C-1

G:\PDX_Projects\12\1397\CAD\Sheets\12-1397-OR-C.dwg C-1 10/27/2016 9:02 AM RLF 20.0s (LMS Tech)

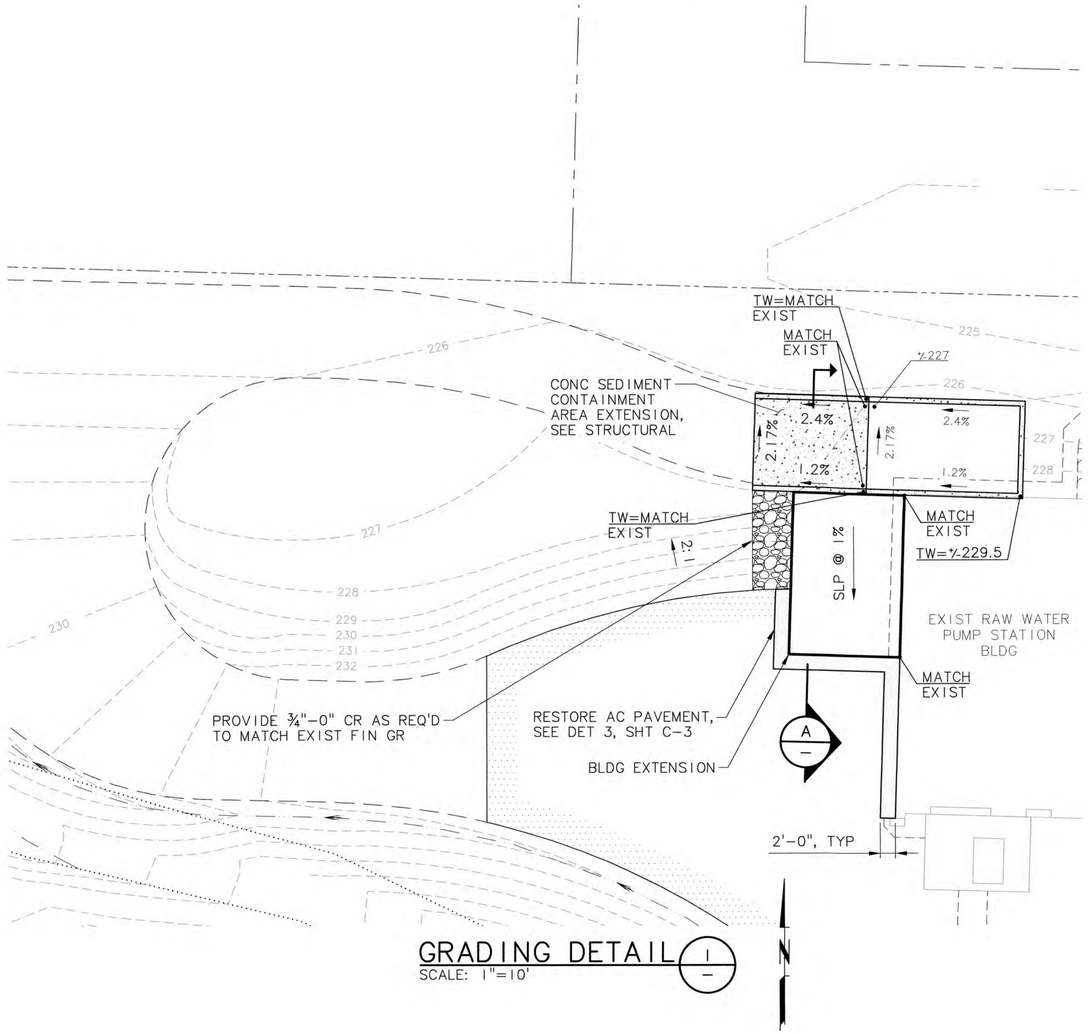

GRADING DETAIL (1 / —)
SCALE: 1"=10'

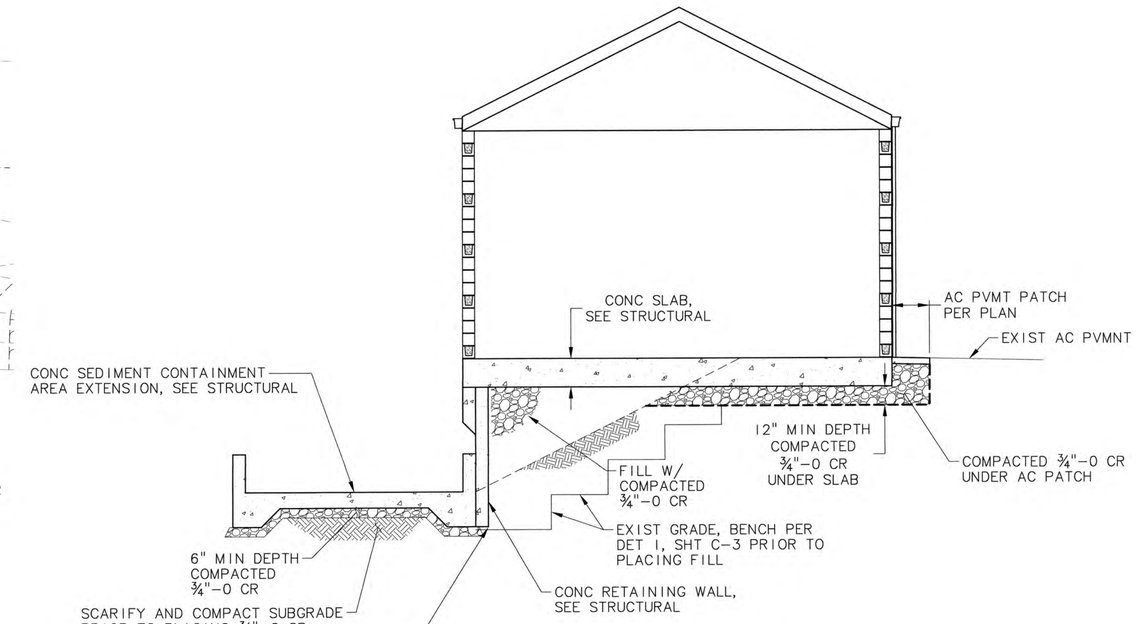

SECTION (A / —)
SCALE: 1/4"=1'-0"

NO.	DATE	BY	REVISION

NOTICE: 0 ½ 1 — IF THIS BAR DOES NOT MEASURE 1" THEN DRAWING IS NOT TO SCALE

AS DESIGNED
RLF/BAW DRAWN
MLH CHECKED

REGISTERED PROFESSIONAL ENGINEER 19195 OREGON JULY 15, 1987 MATTHEW L. HICKEY
RENEWS 6-30-17

MSA Murray, Smith & Associates, Inc. Engineers/Planners
888 S.W. 5th Ave, Suite 1170 Portland, Oregon 97204
PHONE 503-225-9010 FAX 866-274-9807

CITY OF ALBANY, OREGON
RAW WATER PUMP STATION SAND REMOVAL IMPROVEMENTS

GRADING PLAN & BUILDING SECTION

PROJECT NO.: 12-1397.223 | SCALE: AS SHOWN | DATE: OCTOBER 2016

SHEET C-2

G:\PDX_Projects\12\1397\CAD\Sheets\12-1397-OR-C-SECT.dwg C-2 10/27/2016 11:59 AM RLF 20.0s (LMS Tech)

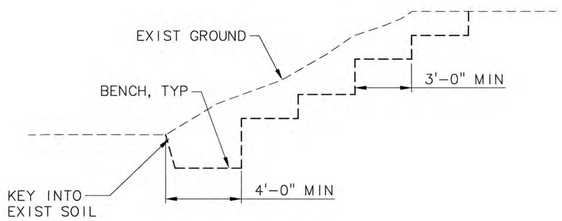

FILLING ON A SLOPE (1/–)

SCALE: NTS

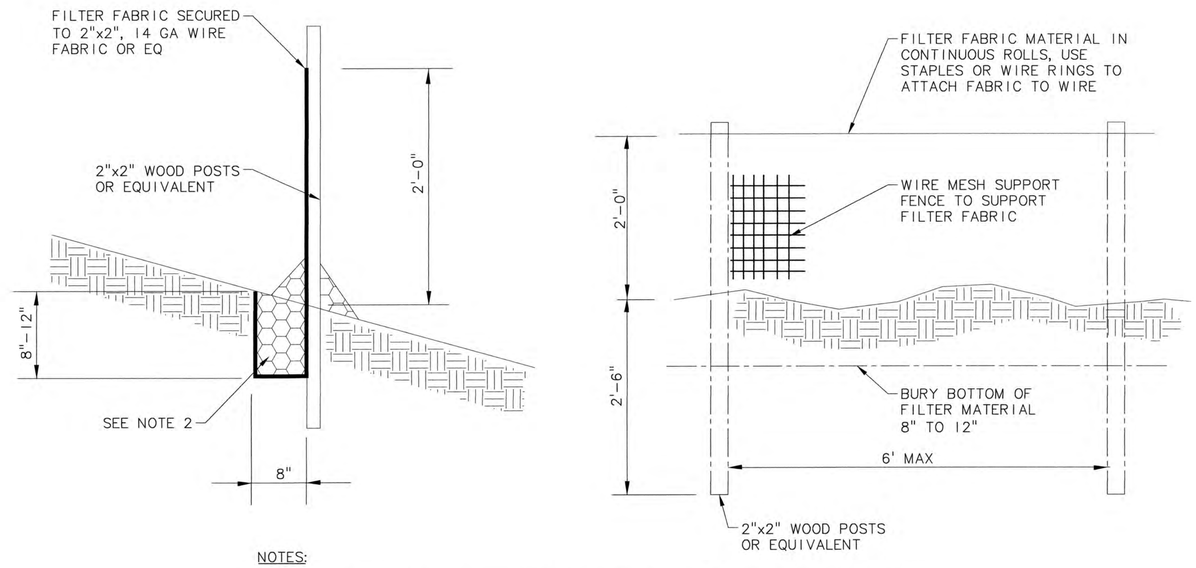

NOTES:

1. CONTRACTOR/DEVELOPER SHALL MAINTAIN AND REPLACE STRAW BALES TO INSURE PROPER EROSION CONTROL.

2. PLACE ¾" GRANULAR DRAIN BACKFILL IN THE TRENCH AND ON BOTH SIDES OF FILTER FABRIC FENCE ON THE SURFACE.

SEDIMENT FENCE DETAIL (2/–)

SCALE: NTS

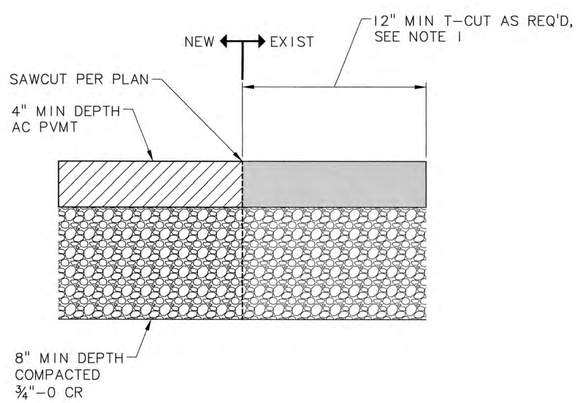

NOTES:

1. CONTRACTOR TO MAINTAIN INITIAL SAWCUT TO THE GREATEST EXTENT POSSIBLE. T-CUT TO BE COMPLETED AT THE DIRECTION AND APPROVAL OF THE CITY OF ALBANY.

2. AC PAVEMENT SHALL HAVE A STRAIGHT CLEAN EDGE PRIOR TO PAVING.

3. ALL JOINTS SHALL BE TACKED, SEALED, AND SANDED.

PAVEMENT PATCH SECTION (3/–)

SCALE: NTS

NO.	DATE	BY	REVISION

NOTICE
0 ½ 1
IF THIS BAR DOES NOT MEASURE 1" THEN DRAWING IS NOT TO SCALE

AS DESIGNED
BAW DRAWN
MLH CHECKED

REGISTERED PROFESSIONAL ENGINEER 19195 OREGON JULY 15, 1997 MATTHEW L. HICKEY
RENEWS 6-30-17

MSA Murray, Smith & Associates, Inc.
Engineers/Planners
888 S.W. 5th Ave, Suite 1170 PHONE 503-225-9010
Portland, Oregon 97204 FAX 866-274-9807

CITY OF ALBANY, OREGON
RAW WATER PUMP STATION SAND REMOVAL IMPROVEMENTS

CIVIL DETAILS

PROJECT NO.: 12-1397.223 | SCALE: AS SHOWN | DATE: OCTOBER 2016

SHEET C-3

G:\PDX_Projects\12\1397\CAD\Sheets\12-1397-OR-C.dwg C-3 10/27/2016 9:02 AM RLF 20.0s (LMS Tech)

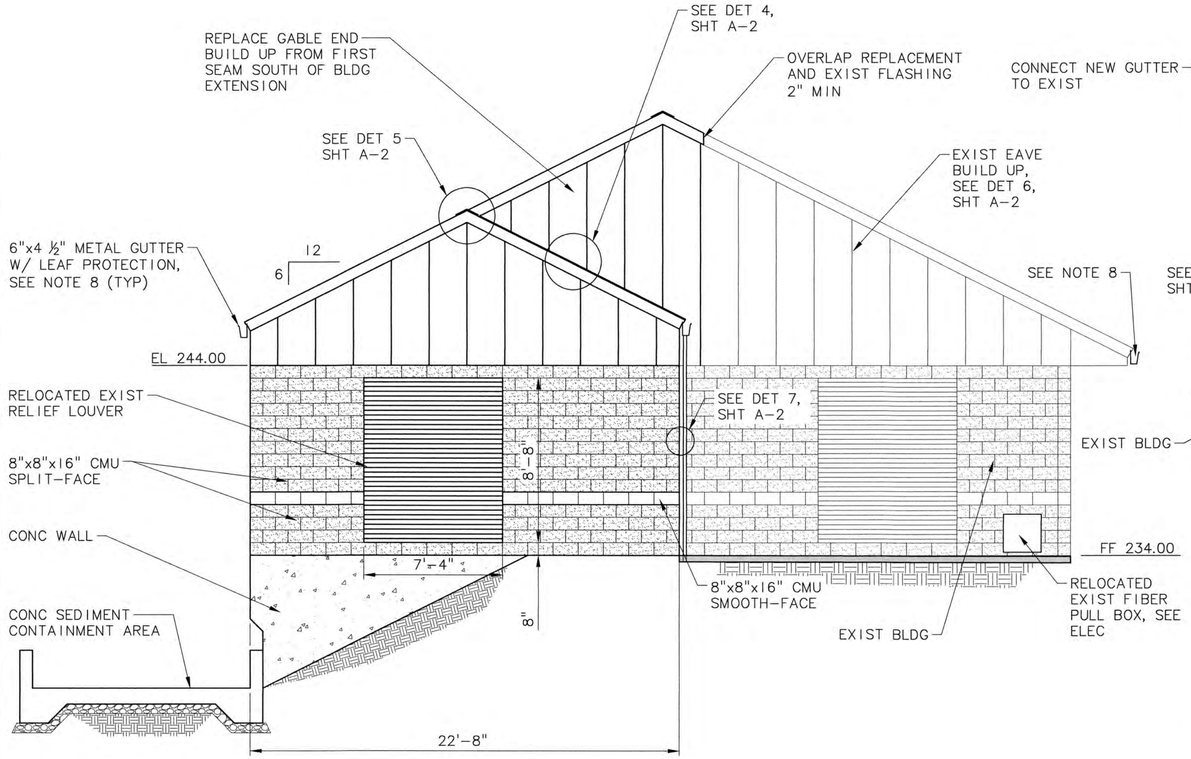

WEST ELEVATION (1/–)
SCALE: 1/4"=1'-0"

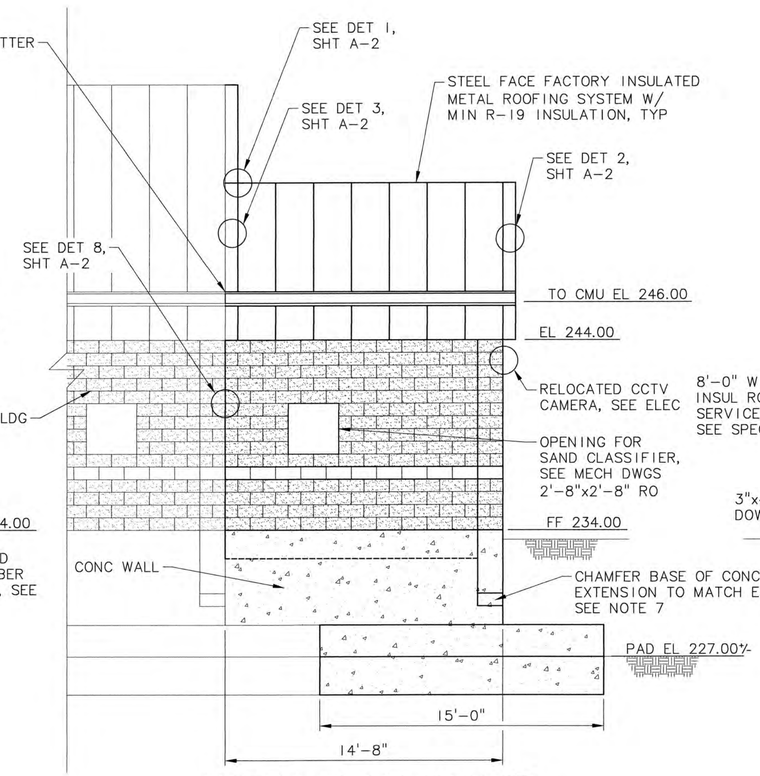

NORTH ELEVATION (2/–)
SCALE: 1/4"=1'-0"

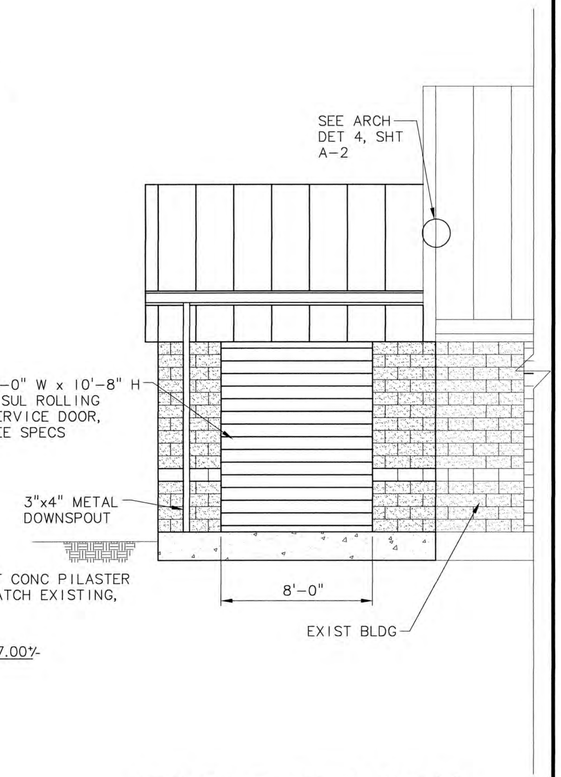

SOUTH ELEVATION (3/–)
SCALE: 1/4"=1'-0"

NOTES:

1. SEE STRUCTURAL FOR HORIZONTAL LOCATIONS OF ROUGH OPENINGS.

2. SEE MECHANICAL SHEETS FOR LOUVER AND EXHAUST REQUIREMENTS.

3. PAINT DOORS, LOUVERS, EXTERIOR TRIM, ELECTRICAL CABINETS, OTHER MISCELLANEOUS ITEMS ATTACHED TO BUILDING EXTERIOR (ITEMS SHOWN ELSEWHERE ON DRAWINGS) , COLORS TO BE SELECTED BY OWNER, SEE SPECIFICATION SECTION 09800.

4. PROVIDE SPLIT-FACE AND SMOOTH-FACE ON EXTERIOR FACES AND ENDS AS SHOWN, MATCH EXISTING BUILDING. PROVIDE SMOOTH-FACE ON ALL INTERIOR FACES.

5. SPLIT-FACE CMU SHALL BE MUTUAL MATERIALS ROSE BROWN COLOR. SMOOTH-FACE CMU SHALL BE MUTUAL MATERIALS SANDSTONE PREMIUM COLOR.

6. SEAL ALL EXPOSED FACES OF CMU AND CONCRETE WITH GRAFFITI-RESISTANT, WATER REPELLANT SEALANT, SEE SPECIFICATIONS.

7. ANCHOR CONCRETE PILASTER TO CONCRETE RETAINING WALL SIMILAR TO DETAIL 7 ON SHEET S-5. PROVIDE REINFORCING FOR PILASTER CONSISTING OF 2 MATS OF #5 REBAR AT 12" O.C. MAXIMUM SPACING.

8. LEAF PROTECTION TO BE PROVIDED IN ALL GUTTERS FOR BOTH THE PROPOSED AND EXISTING BUILDING. SEE SECTION 07620, SHEET METAL FLASHING AND TRIM FOR REQUIREMENTS.

NO.	DATE	BY	REVISION

NOTICE
0 ½ 1
IF THIS BAR DOES NOT MEASURE 1" THEN DRAWING IS NOT TO SCALE

AS
DESIGNED
RLF/BAW
DRAWN
MLH
CHECKED

REGISTERED PROFESSIONAL ENGINEER 19195 OREGON JULY 15, 1987 MATTHEW L. HICKEY
RENEWS 6-30-17

MSA Murray, Smith & Associates, Inc. Engineers/Planners
888 S.W. 5th Ave, Suite 1170 Portland, Oregon 97204
PHONE 503-225-9010 FAX 866-274-9807

CITY OF ALBANY, OREGON
RAW WATER PUMP STATION SAND REMOVAL IMPROVEMENTS

BUILDING ELEVATIONS

PROJECT NO.: 12-1397.223 | SCALE: AS SHOWN | DATE: OCTOBER 2016

SHEET A-1

G:\PDX_Projects\12\1397\CAD\Sheets\12-1397-OR-A.dwg A-1 10/27/2016 11:59 AM RLF 20.0s (LMS Tech)

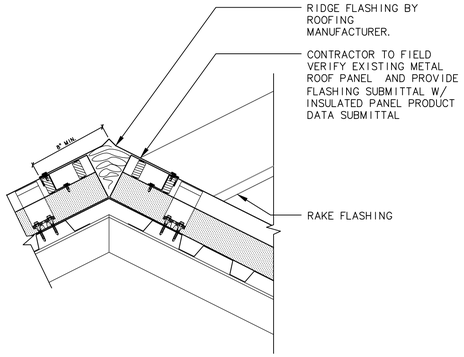

01 A-1 ROOF PEAK AT EXISTING WALL
1 1/2"=1'-0" 0 3" 6" DAXXX-0X

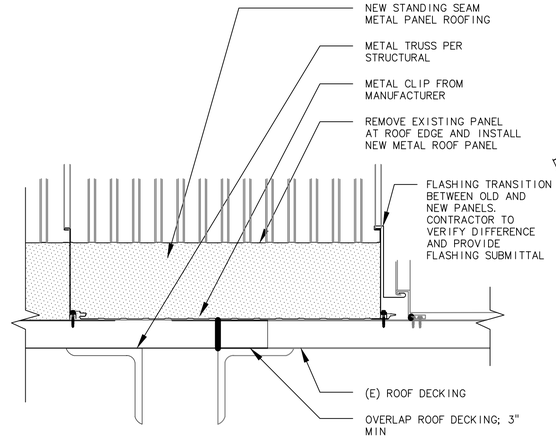

03 A-1 ROOF TRANSITION
3"=1'-0" 0 3" 6" DAXXX-0X

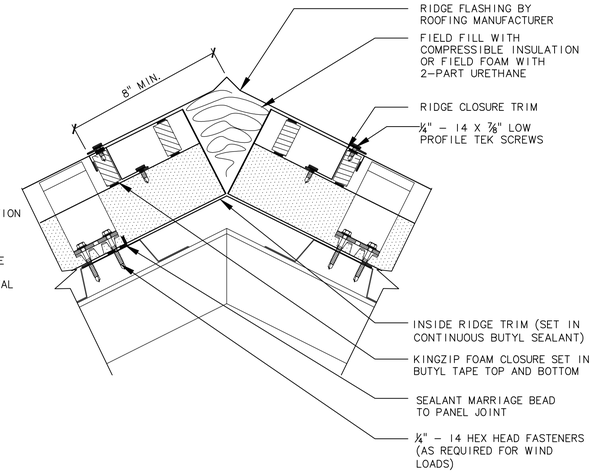

05 A-1 ROOF PEAK
3"=1'-0" 0 3" 6" DAXXX-0X

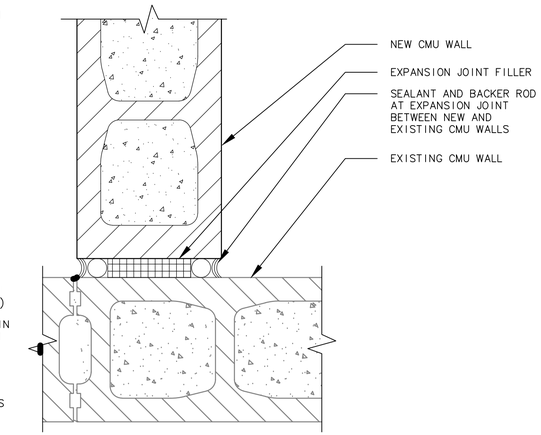

07 A-1 CMU PERPENDICULAR WALL
3"=1'-0" 0 3" 6" DAXXX-0X

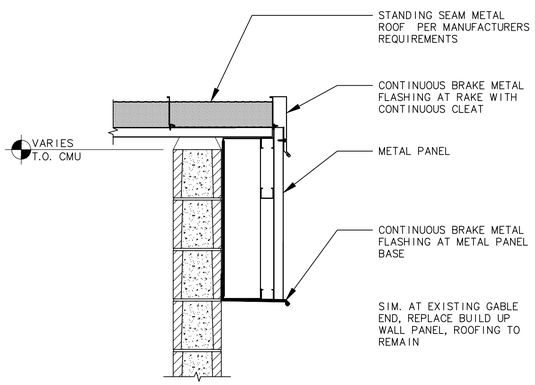

02 A-1 GABLE BUILD UP
1"=1'-0" 0 3" 6" 9" 12" 15" 18" DAXXX-0X

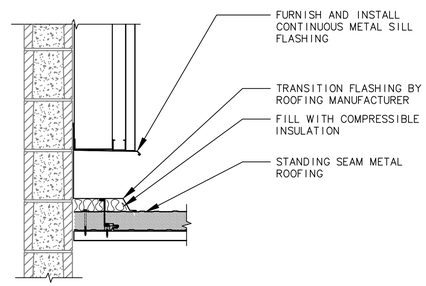

04 A-1 ROOF TO WALL TRANSITION
1"=1'-0" 0 3" 6" 9" 12" 15" 18" DAXXX-0X

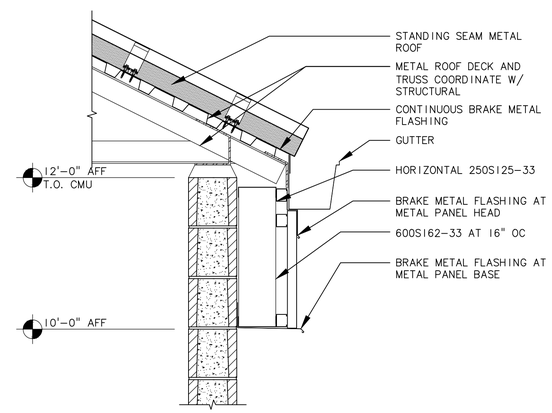

06 A-1 EAVE BUILD UP
1"=1'-0" 0 3" 6" 9" 12" 15" 18" DAXXX-0X

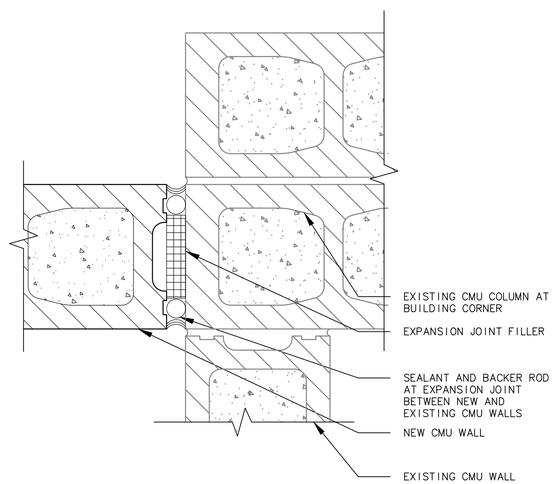

08 A-1 CORNER CMU WALL
3"=1'-0" 0 3" 6" DAXXX-0X

mwa architects
70 NW COUCH STREET
SUITE 401
PORTLAND, OR 97209
P 503 973 5151
F 503 973 5060
MWAARCHITECTS.COM

NO.	DATE	BY	REVISION

NOTICE
0 1
IF THIS BAR DOES NOT MEASURE 1" THEN DRAWING IS NOT TO SCALE

DLW
DESIGNED NCS
DRAWN DLW
CHECKED

REGISTERED ARCHITECT JEFFREY J. McGRAW PORTLAND, OR STATE OF OREGON

MSA Murray, Smith & Associates, Inc. Engineers/Planners
121 S.W. Salmon, Suite 900 Portland, Oregon 97204
PHONE 503-225-9010 FAX 503-225-9022

CITY OF ALBANY, OREGON
RAW WATER SAND REMOVALIMPROVEMENTS

ARCHITECTURAL DETAILS

PROJECT NO.: 12-1397.223 | SCALE: AS SHOWN | DATE: OCTOBER 2016

SHEET A-2

C:\Users\eruzicka\appdata\local\temp\AcPublish_99688\A-2.dwg A100 10/18/2016 9:35 AM ERUZICKA 20.0s (LMS Tech)

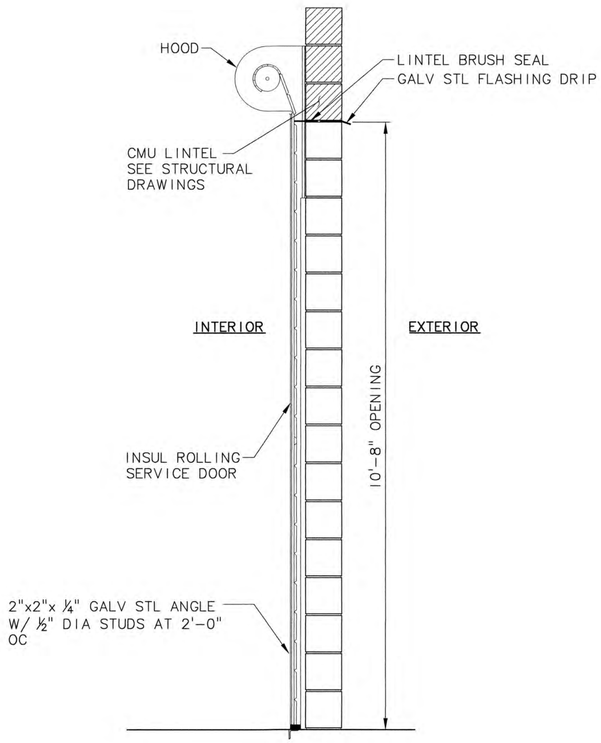

NOTE:

1. LOCATE DOOR PULL CHAIN TO LEFT HAND OF DOOR AS VIEWED FROM INTERIOR.

2. MOUNT DOOR TO CMU PER MANUFACTURERS REQUIREMENTS.

OVERHEAD COILING DOOR SECTION (1/–)

SCALE: NTS

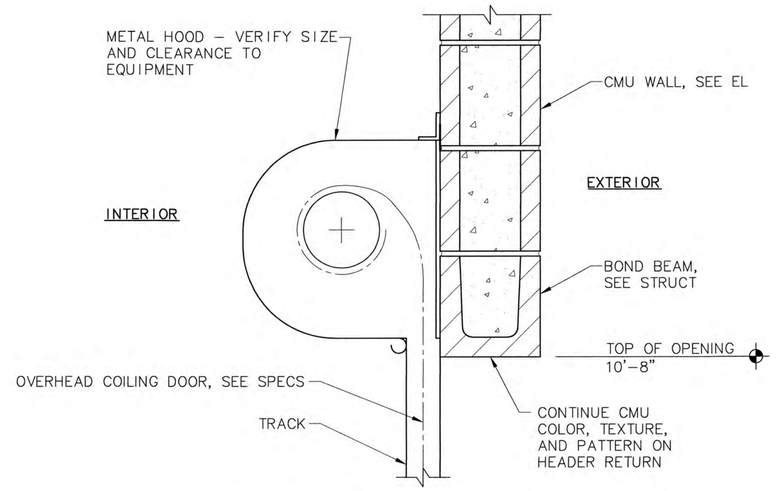

OVERHEAD COILING DOOR HEAD (2/–)

SCALE: NTS

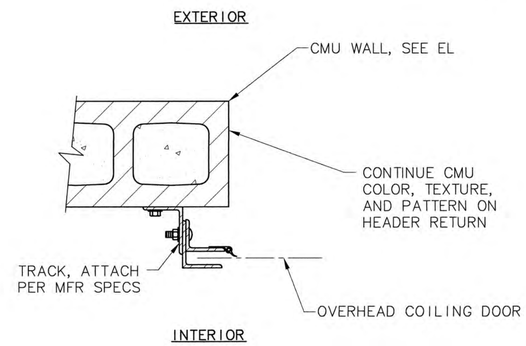

OVERHEAD COILING DOOR JAMB/TRACK (3/–)

SCALE: NTS

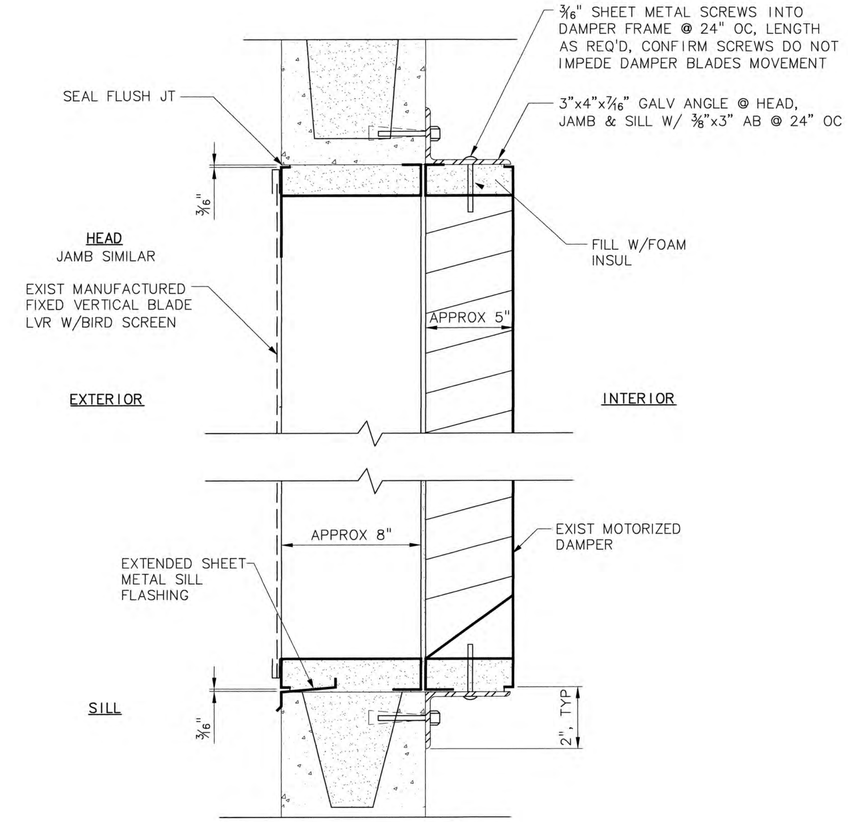

NOTE:

1. CONFIRM CONFIGURATION OF EXISTING LOUVER MOUNTING ANGLE PRIOR TO FABRICATION OF GALVANIZED STEEL MOUNTING ANGLES. REMOVE EXISTING LOUVER MOUNTING ANGLE INSIDE THE BUILDING, AS REQUIRED, WITHOUT DAMAGE TO EXISTING LOUVER AND DAMPER.

2. MOUNT LOUVER / DAMPER PER MANUFACTURERS REQUIREMENTS.

LOUVER AT CMU (4/–)

SCALE: 3"=1'-0"

NO.	DATE	BY	REVISION

NOTICE
0 ½ 1
IF THIS BAR DOES NOT MEASURE 1" THEN DRAWING IS NOT TO SCALE

AS DESIGNED
RLF/BAW DRAWN
MLH CHECKED

REGISTERED PROFESSIONAL ENGINEER 19195 OREGON JULY 15, 1981 MATTHEW L. HICKEY
RENEWS 6-30-17

MSA Murray, Smith & Associates, Inc.
Engineers/Planners
888 S.W. 5th Ave, Suite 1170 PHONE 503-225-9010
Portland, Oregon 97204 FAX 866-274-9807

CITY OF ALBANY, OREGON
RAW WATER PUMP STATION SAND REMOVAL IMPROVEMENTS

ARCHITECTURAL DETAILS

PROJECT NO.: 12-1397.223 | SCALE: AS SHOWN | DATE: OCTOBER 2016

SHEET A-3

G:\PDX_Projects\12\1397\CAD\Sheets\12-1397-OR-A-DET.dwg A-3 10/27/2016 9:19 AM RLF 20.0s (LMS Tech)

X:\2012\12-176 To 12-200\12-192\Acad\12-192-03 Albany WTP Sand Removal Improvements – Final Structural Drawings.dwg S-1 10/27/2016 12:33 PM ### 19.1s (LMS Tech)

STRUCTURAL SHEETS:

S-1 GENERAL STRUCTURAL NOTES
S-2 SPECIAL INSPECTION SHEET
S-3 FOUNDATION PLAN & ROOF FRAMING PLAN
S-4 SECTIONS
S-5 STRUCTURAL DETAILS
S-6 STRUCTURAL DETAILS

GENERAL STRUCTURAL NOTES:

1. CONTRACTOR SHALL COORDINATE ALL MATERIAL & EQUIPMENT FROM MECHANICAL, ELECTRICAL & OTHER TRADES WITH STRUCTURAL ELEMENTS OF THE PROJECT.

2. THESE NOTES ARE GENERAL IN NATURE AND ARE INTENDED TO SET MINIMUM STANDARDS FOR CONSTRUCTION. THE CONTRACTOR SHALL BE COMPLETELY FAMILIAR WITH THE CONTRACT DOCUMENTS AND HAVE A COPY OF THEM ON SITE AT ALL TIMES.

3. FOR ANY PORTION OF THE CONSTRUCTION WHICH THE CONTRACTOR IS UNABLE TO ASCERTAIN THE REQUIRED CONSTRUCTION OR WHERE CONFLICTS EXIST, IT IS THE CONTRACTOR'S RESPONSIBILITY TO REQUEST ADDITIONAL INFORMATION (RFIs) AND/OR CLARIFICATIONS BEFORE CONSTRUCTION.

4. ALL WORK SHALL BE IN STRICT CONFORMANCE WITH THE 2012 INTERNATIONAL BUILDING CODE (IBC) AS AMENDED BY THE 2014 OREGON STRUCTURAL SPECIALTY CODE (OSSC). ALL BUILDING ELEMENTS AND COMPONENTS NOT SPECIFICALLY DETAILED IN THESE STRUCTURAL CONSTRUCTION DOCUMENTS SHALL BE FABRICATED AND CONSTRUCTED IN ACCORDANCE WITH THE MINIMUM STANDARDS CONTAINED IN THE IBC AS AMENDED BY THE STATE OF OREGON.

5. THE CONTRACTOR SHALL VERIFY ALL DIMENSIONS AND ELEVATIONS BEFORE CONSTRUCTION. THE ARCHITECT AND ENGINEER SHALL BE NOTIFIED OF ANY DISCREPANCIES OR INCONSISTENCIES.

6. THE CONTRACT STRUCTURAL DRAWINGS REPRESENT THE FINISHED STRUCTURE. METHODS, PROCEDURES, AND SEQUENCE OF CONSTRUCTION ARE THE RESPONSIBILITY OF THE CONTRACTOR. THE CONTRACTOR SHALL TAKE ALL NECESSARY PRECAUTIONS TO MAINTAIN AND ENSURE THE INTEGRITY OF THE STRUCTURE AT ALL STAGES OF CONSTRUCTION.

7. CONSTRUCTION LOADS SHALL NOT EXCEED THE DESIGN LIVE LOAD FOR THE STRUCTURE. PROVIDE SHORING AND/OR BRACING WHERE LOADS EXCEED DESIGN CAPACITY AND WHERE STRUCTURES HAVE NOT ATTAINED DESIGN STRENGTH.

8. CLADDING, WATERPROOFING, AND ARCHITECTURAL FEATURES ARE NOT PART OF THE STRUCTURAL DESIGN. ANY DEPICTION OF SUCH FEATURES ON THE STRUCTURAL DRAWINGS ARE NOT INTENDED TO BE USED FOR CONSTRUCTION. REPRESENTATION OF SUCH FEATURES ON THESE DRAWINGS MAY OR MAY NOT BE ACCURATE. REFER TO ARCHITECTURAL DRAWINGS AND/OR SPECIFICATIONS.

DESIGN LOADS: PER 2012 IBC & 2014 OSSC

1603.1.1 – FLOOR LOADS:	
DEAD LOAD	150 PCF
LIVE LOAD	100 PSF
1603.1.2 – ROOF LOADS:	
DEAD LOAD	15 PSF
LIVE LOAD	SEE SNOW LOADS
1603.1.3 – SNOW LOADS:	
GROUND SNOW LOAD, Pg	25 PSF
FLAT-ROOF SNOW LOAD, Pf	21 PSF, USE 25 PSF MIN. (2014 OSSC)
SNOW EXPOSURE FACTOR, Ce	1.0
SNOW LOAD IMPORTANCE FACTOR, Is	1.0, CATEGORY II
THERMAL FACTOR, Ct	1.2
1603.1.4 – WIND DESIGN CRITERIA:	
ULTIMATE DESIGN WIND SPEED, Vult	130 MPH
NOMINAL DESIGN WIND SPEED, Vasd	91 MPH
RISK CATEGORY	IV
WIND EXPOSURE	EXPOSURE C
INTERNAL PRESSURE COEFFICIENT	SIMPLIFIED METHOD PER IBC, 1609.6
COMPONENTS & CLADDING: DESIGN WIND PRESSURES	(+/–)
WALL ELEMENTS (Atrib = $10ft^2$)	21.81/–23.60 PSF
OVERHANG ELEMENTS (Atrib = $10ft^2$)	NA/–41.63 PSF
ROOF ELEMENTS (Atrib = $10ft^2$)	12.55/–19.87 PSF
1603.1.5 – EARTHQUAKE DESIGN CRITERIA:	
RISK CATEGORY	IV
SEISMIC IMPORTANCE FACTOR, I_E	1.2
SPECTRAL ACCELERATION, S_s	0.875 g
SPECTRAL ACCELERATION, S_1	0.423 g
SITE CLASS	C
SPECTRAL RESPONSE COEFFICIENT, S_{DS}	0.620 g
SPECTRAL RESPONSE COEFFICIENT, S_{D1}	0.390 g
SEISMIC DESIGN CATEGORY	CATEGORY D
SEISMIC FORCE RESISTING SYSTEM(S)	SPECIAL REINFORCED MASONRY SHEAR WALLS
RESPONSE MODIFICATION FACTORS(S), R	5.5
SEISMIC RESPONSE COEFFICIENTS(S), C_S	0.183, WORKING STRESS
ANALYSIS PROCEDURE	GENERAL PROCEDURE, PER ASCE-7

PREMANUFACTURED CONNECTION HARDWARE:

1. CONNECTION HARDWARE IS BY THE SIMPSON COMPANY OF SAN LEANDRO, CA. ALL STEEL CONNECTORS SHALL BE GALVANIZED OR BY SOME METHOD MADE CORROSION RESISTANT, UNLESS OTHERWISE INDICATED.

2. PROVIDE BOLTED OR NAILED CONNECTIONS FOR THE MAXIMUM CAPACITY UNLESS NOTED OTHERWISE.

3. CONNECTORS IN CONTACT WITH PRESSURE TREATED WOOD SHALL BE EITHER POST HOT-DIP GALVANIZED OR STAINLESS STEEL. FASTENERS SHALL BE OF THE SAME MATERIAL OR PROTECTIVE COATING AS THE CONNECTORS, DO NOT MIX DIFFERING METALS IN THE SAME CONNECTION.

PSE
PETERSON STRUCTURAL ENGINEERS
Peterson Structural Engineers, Inc.
9400 SW Barnes Road, Suite 100
Portland, Oregon 97225
(503) 292-1635
10/25/2016 #12-192

FOUNDATIONS:

1. GEOTECHNICAL REPORT WAS PREPARED BY DAVID L. RUNNING, P.E., G.E. OF FOUNDATION ENGINEERING, INC., CORVALLIS, OREGON. PHONE: (541) 757-7645, DATED NOVEMBER 17, 2015 (THEIR FILE No. 2151085). THE CONTRACTOR SHALL BE FAMILIAR WITH THAT SUPPLEMENTAL REPORT INFORMATION AND THE RECOMMENDATIONS CONTAINED THEREIN. SEE SPECS.

2. ALL FOUNDATIONS TO BEAR ON UNDISTURBED NATIVE MATERIAL, OR GRANULAR COMPACTED ENGINEERED FILL, PER THE PROJECT CONTRACT DOCUMENTS. THE CONTRACTOR IS DIRECTED TO THE GEOTECHNICAL REPORT IN THE PROJECT SUPPLEMENTAL INFORMATION FOR ADDITIONAL INFORMATION. EXCAVATIONS FOR FOUNDATIONS SHALL BE OBSERVED BY THE GEOTECHNICAL ENGINEER PRIOR TO PLACING OF CONCRETE FOR FOUNDATION.

CONCRETE:

1. ALL CONCRETE SHALL BE HARD ROCK CONCRETE MEETING REQUIREMENTS OF ACI-301, "SPECIFICATIONS FOR STRUCTURAL CONCRETE FOR BUILDINGS". MIX PROPORTIONS SHALL BE PER ACI-301, METHOD 2 OR THE ALTERNATE PROCEDURE. SUBMIT MIX DESIGN FOR REVIEW BY STRUCTURAL ENGINEER FOR APPROVAL PRIOR TO CONSTRUCTION.

2. STRUCTURAL CONCRETE SHALL ATTAIN THE FOLLOWING MINIMUM COMPRESSIVE STRENGTH AT 28 DAYS:

TYPE	f'c	SLUMP	w/c	AIR
SLABS	4,000 psi	1-3"	0.40	5%
WALLS	4,000 psi	1-4"	0.40	5%

3. ALL CONCRETE EXPOSED TO WEATHER SHALL CONTAIN 5% (±) 1% AIR ENTRAINMENT BY VOLUME. AIR ENTRAINMENT SHALL BE IN CONFORMANCE WITH ASTM C260 AND C494.

4. COLD WEATHER PLACEMENT SHALL CONFORM TO ACI-306. HOT WEATHER PLACEMENT SHALL CONFORM TO ACI-305. MECHANICALLY VIBRATE ALL FORMED CONCRETE. DO NOT OVER-VIBRATE. PLACE CONCRETE MONOLITHICALLY BETWEEN CONSTRUCTION OR CONTROL JOINTS. PROTECT ALL CONCRETE FROM PREMATURE DRYING.

5. CHAMFER ALL EXTERIOR CORNERS 1/2" UNLESS SHOWN OTHERWISE.

6. SLUMP LIMITS MAY BE INCREASED BY ADDITION OF ADMIXTURES PROVIDED THAT THE WATER/CEMENT RATIO OF THE ORIGINAL MIX DESIGN IS NOT EXCEEDED. WATER REDUCING ADMIXTURE SHALL BE IN CONFORMANCE WITH ASTM494, USED IN CONFORMANCE WITH MANUFACTURER'S INSTRUCTIONS. SUBMIT ADMIXTURES TO ENGINEER FOR REVIEW PRIOR TO CONSTRUCTION.

7. CEMENT SHALL BY TYPE I OR II IN CONFORMANCE WITH ASTM C150. AGGREGATES SHALL BE IN CONFORMANCE WITH ASTM C33. COARSE AGGREGATES SHALL NOT EXCEED ¾". WATER SHALL BE CLEAN AND POTABLE.

8. REINFORCING STEEL SHALL CONFORM TO ASTM A615, GRADE 60. GRADE 40 MAY BE USED FOR #3 AND SMALLER TIES AND STIRRUPS. DETAIL AND PLACE ACCORDING TO ACI MANUAL SP-66.

9. UNLESS OTHERWISE NOTED, MINIMUM COVER SHALL BE 1 1/2" FOR #5 AND SMALLER BARS, 2" FOR #6 AND LARGER BARS AND 3" WHEN POURED AGAINST EARTH. SUPPORT REINFORCEMENT WITH APPROVED CHAIRS, SPACERS, OR TIES.

10. PROVIDE MINIMUM 48 BAR DIAMETERS AT SPLICES. NO MORE THAN 50% OF REINFORCING SHALL BE SPLICED AT ANY LOCATION. UNLESS OTHERWISE NOTED, BEND ALL HORIZONTAL REINFORCING A MINIMUM OF 2'-0" AT CORNERS AND WALL/FOOTING INTERSECTIONS WITH MIN. EMBEDMENT BEYOND INTERFACE PER DEVELOPMENT LENGTH SPECIFIED IN ACI 318.

11. FORMWORK SHALL BE IN ACCORDANCE WITH ACI-347 "RECOMMENDED PRACTICE FOR CONCRETE FORMWORK". FORMS SHALL BE DESIGNED BY THE CONTRACTOR. BRACING SHALL BE PROVIDED AS REQUIRED OR UNTIL THE CONCRETE HAS REACHED ITS SPECIFIED 28-DAY STRENGTH. ALL SHORING SHALL BE THE RESPONSIBILITY OF THE CONTRACTOR. FORMWORK, SUPPORTS, AND SHORING SHALL PROVIDE FINISHED CONCRETE SURFACES AT ALL FACES: LEVEL, PLUMB, AND TRUE TO DIMENSIONS AND ELEVATIONS SHOWN IN THE DRAWINGS.

MANUFACTURED STEEL ROOF TRUSSES:

1. MANUFACTURED STEEL ROOF TRUSSES SHALL BE AT 48" CENTERS.

2. TRUSSES SHALL BE DESIGNED FOR SPECIFIED ROOF LOADS. STRUCTURAL CALCULATIONS SHALL BE SEALED BY AN OREGON LICENSED STRUCTURAL ENGINEER AND SUBMITTED TO THE ENGINEER FOR APPROVAL PRIOR TO FABRICATION.

3. MANUFACTURER SHALL PROVIDE BRACING, BLOCKING, HOLDOWNS, AND ALL ACCESSORIES REQUIRED FOR PROPER INSTALLATION.

4. SHOP DRAWINGS SHALL PROVIDE PLACING AND ERECTION DIRECTION TO INSTALLER. CALCULATIONS AND SHOP DRAWINGS SHALL USE COMMON IDENTIFYING MARKS TO FACILITATE SHOP DRAWING REVIEW.

STEEL DECKING:

1. ALL STEEL DECKING SHALL COMPLY WITH THE MOST RECENT EDITION OF THE STEEL DECK INSTITUTE (SDI) SPECIFICATIONS FOR STEEL FORM DECK, AS WELL AS ALL MANUFACTURER'S RECOMMENDATIONS FOR INSTALLATION AND CARE.

2. ALL STEEL DECKING MATERIAL SHALL COMPLY WITH THE MANUFACTURER'S ICC/IAPMO REPORTS, AND HAVE A MINIMUM YIELD STRENGTH OF 33 KSI.

3. CONNECT TO FRAMING MEMBERS w/(4)PLW WELD PATTERN AS SPECIFIED IN THE MANUFACTURER'S LITERATURE. ALL FRAMING MEMBERS SUPPORTING DECKING SHALL BE DRY PRIOR TO WELDING.

4. WELDS SHALL BE COLD-GALVANIZED.

5. ALL SEAM CONNECTIONS SHALL BE COMPLETED w/ VERCO PUNCH LOCK SIDE LAP @24" o.c..

6. STEEL DECKING SHALL BE MINIMUM 3-SPAN (CONTINUOUS OVER SUPPORTS). WHERE A 3-SPAN MINIMUM IS NOT POSSIBLE, THE CONTRACTOR SHALL FURNISH A HEAVIER GAGE DECKING TO PROVIDE EQUIVALENT LOADING OF SPECIFIED 3-SPAN DECKING CONDITION.

7. STEEL DECKING SHALL BE GALVANIZED.

8. DECKING SHALL BE MANUFACTURED BY VERCO AS FOLLOWS: 20 GAGE, 36" WIDE, 1.5" DEEP, WITH A MINIMUM I=0.219 IN^4/FT, A MINIMUM S=0.230 IN^3/FT, AND MINIMUM LOAD CAPACITIES AS FOLLOWS (BASED ON A 4'-0" SPAN): 777 PLF DIAPHRAGM SHEAR, AND 288 PSF SUPERIMPOSED LOAD.

9. ALL METAL ACCESSORIES SHALL BE THE SAME GAGE AS THE DECKING UNLESS OTHERWISE NOTED.

10. THE CONTRACTOR MAY SUBMIT STEEL DECKING BY OTHER MANUFACTURERS FOR REVIEW AND APPROVAL BY THE ENGINEER OF RECORD. ALTERNATE SYSTEMS MUST MEET THE MINIMUM SECTION PROPERTIES AND LOAD REQUIREMENTS AS SPECIFIED ABOVE.

POST-INSTALLED CONCRETE ANCHORS:

1. ADHESIVE:
   - 1.1. ADHESIVE ANCHORS SHALL BE INSTALLED BY QUALIFIED PERSONNEL TRAINED TO INSTALL ADHESIVE ANCHORS IN ACCORDANCE WITH THE CONTRACT DOCUMENTS AND WITH STRICT ADHERENCE TO THE PROVISIONS WITHIN THE MANUFACTURER'S PRINTED INSTALLATION INSTRUCTIONS.
   - 1.2. AT THE TIME OF ANCHOR INSTALLATION, IN ACCORDANCE WITH ACI 318-11 SECTION D.2.2, ADHESIVE ANCHORS SHALL BE INSTALLED IN CONCRETE HAVING A MINIMUM AGE OF 21 DAYS.
   - 1.3. WHERE THE AUTHORITY HAVING JURISDICTION OVER THIS PROJECT REQUIRES ADHERENCE TO ACI 318-11 SECTION D.9.2.2, INSTALLATION OF ADHESIVE ANCHORS IN HORIZONTAL TO VERTICALLY OVERHEAD ORIENTATION SHALL BE DONE BY A CERTIFIED ADHESIVE ANCHOR INSTALLER (AAI) AS CERTIFIED THROUGH ACI AND IN ACCORDANCE WITH ACI 318-11 SECTION D.9.2.2. PROOF OF CURRENT CERTIFICATION SHALL BE SUBMITTED TO THE ENGINEER FOR APPROVAL PRIOR TO COMMENCEMENT OF INSTALLATION. NOTE: THE STATE OF OREGON DOES NOT REQUIRE ADHERENCE TO ACI 318-11 SECTION D.9.2.2.

2. MECHANICAL:
   - 2.1. MECHANICAL ANCHORS SHALL BE INSTALLED BY QUALIFIED PERSONNEL TRAINED TO INSTALL MECHANICAL ANCHORS IN ACCORDANCE WITH THE CONTRACT DOCUMENTS AND WITH STRICT ADHERENCE TO THE PROVISIONS WITHIN THE MANUFACTURER'S PRINTED INSTALLATION INSTRUCTIONS.

CONCRETE MASONRY (CMU):

1. CONCRETE MASONRY UNITS SHALL BE MEDIUM WEIGHT UNITS CONFORMING TO ASTM C90. THEY SHALL HAVE A MINIMUM COMPRESSIVE STRENGTH OF 2,000 PSI. CONTRACTOR TO VERIFY PER UNIT STRENGTH METHOD.

2. MORTAR SHALL BE TYPE M OR S WITH A MINIMUM COMPRESSIVE STRENGTH OF 1,900 PSI.

3. GROUT SHALL CONFORM TO ASTM C476 AND SHALL BE EQUAL TO 2,500 PSI MIN.

4. FOR GROUT LIFTS EXCEEDING FIVE (5) FEET, CLEAN OUTS SHALL BE PROVIDED AT THE BOTTOM OF EACH CELL AND AT NO MORE THAN 32" APART. GROUT SHALL ONLY BE INSTALLED IN CELLS CONTAINING REINFORCING STEEL OR AS INDICATED IN THESE PLANS.

5. UNIT STRENGTH METHOD SHALL BE USED TO VERIFY MINIMUM COMPRESSIVE STRENGTH OF MASONRY f'_m = 1,900 PSI.

STRUCTURAL STEEL:

1. STRUCTURAL STEEL SHALL CONFORM TO THE FOLLOWING GRADES, UNLESS NOTED OTHERWISE ON THE PLANS:

   PLATES & BARS– ASTM A36
   TUBES – ASTM A500, GRADE B (Fy = 46 ksi)
   PIPES – ASTM A53, GRADE B
   HSS (RECTANGULAR) – ASTM A500, GRADE B (Fy = 46 ksi)
   HSS (ROUND) – ASTM A500, GRADE B (Fy = 42 ksi)
   W-SECTIONS – ASTM A992
   M/S/HP-SHAPES – ASTM A36
   CHANNELS & ANGLES – ASTM A36

2. WELD ACCORDING TO CURRENT AWS STANDARDS WITH E70XX ELECTRODES.

3. ALL STEEL EXPOSED TO WEATHER SHALL BE PAINTED OR HOT-DIP GALVANIZED, UNLESS NOTED OTHERWISE.

4. ALL STRUCTURAL CONNECTION BOLTS SHALL BE ASTM A325, UNLESS NOTED OTHERWISE. HOOKED, HEADED, THREADED, AND NUTTED ANCHOR RODS SHALL BE ASTM F1554 (Fy = 36 ksi), UNLESS NOTED OTHERWISE.

STRUCTURAL OBSERVATION REQUIREMENTS:

1. THE OWNER SHALL EMPLOY THE ENGINEER OF RECORD OR AN ALTERNATE OREGON LICENSED PROFESSIONAL ENGINEER, APPROVED BY THE ENGINEER OF RECORD, TO PERFORM STRUCTURAL OBSERVATIONS IN ACCORDANCE WITH SECTION 1704.5 OF THE INTERNATIONAL BUILDING CODE.

2. STRUCTURAL OBSERVATION IS THE VISUAL OBSERVATION OF THE STRUCTURAL SYSTEM BY A REGISTERED DESIGN PROFESSIONAL FOR GENERAL CONFORMANCE TO THE APPROVED CONSTRUCTION DOCUMENTS AT SIGNIFICANT CONSTRUCTION STAGES AND AT COMPLETION OF THE STRUCTURAL SYSTEM. STRUCTURAL OBSERVATION DOES NOT INCLUDE OR WAIVE THE RESPONSIBILITY FOR ANY OTHER INSPECTION CRITERIA, INCLUDING SPECIAL INSPECTION, AS REQUIRED BY THE BUILDING OFFICIAL OR AS INDICATED WITHIN THE INTERNATIONAL BUILDING CODE.

3. DEFICIENCIES SHALL BE REPORTED IN WRITING TO THE OWNER AND THE BUILDING OFFICIAL (AND THE ENGINEER OF RECORD IF AN ALTERNATE ENGINEER IS USED FOR STRUCTURAL OBSERVATION). AT THE CONCLUSION OF THE STRUCTURAL WORK INCLUDED WITHIN THE PERMIT, THE STRUCTURAL OBSERVER SHALL SUBMIT TO THE BUILDING OFFICIAL AND THE OWNER (AND THE ENGINEER OF RECORD IF AN ALTERNATE ENGINEER IS USED FOR STRUCTURAL OBSERVATION) A WRITTEN STATEMENT THAT THE SITE VISITS HAVE BEEN MADE AND IDENTIFY ANY REPORTED DEFICIENCIES WHICH, TO THE BEST OF THE STRUCTURAL OBSERVER'S KNOWLEDGE, HAVE NOT BEEN RESOLVED.

4. THE CONTRACTOR SHALL MAKE AVAILABLE ALL MEANS AND METHODS NECESSARY FOR THE STRUCTURAL OBSERVER TO PERFORM THE REQUIRED STRUCTURAL OBSERVATIONS. IN ADDITION, THE CONTRACTOR SHALL NOTIFY THE OWNER AND STRUCTURAL OBSERVER A MINIMUM OF 48 HOURS BEFORE THE TIME AT WHICH THE SPECIFIED STRUCTURAL OBSERVATIONS MAY BE PERFORMED. IN ADDITION THE CONTRACTOR SHALL UPDATE THE STRUCTURAL OBSERVER OF THE CONSTRUCTION PROGRESS.

5. STRUCTURAL OBSERVATIONS SHALL BE PERFORMED FOR THE FOLLOWING AREAS OF WORK:
   - 5.1. FOLLOWING THE FORMING AND REINFORCING OF THE FLOOR SLAB, PRIOR TO CONCRETE POUR
   - 5.2. FOLLOWING THE CMU WALL REINFORCING, PRIOR TO THE FIRST GROUT POUR
   - 5.3. FOLLOWING THE REPRESENTATIVE LINTEL POUR
   - 5.4. FOLLOWING THE ROOF FRAMING AND HARDWARE PLACEMENT, PRIOR TO DECKING INSTALLATION
   - 5.5. FOLLOWING THE COMPLETION OF ALL STRUCTURAL ELEMENTS CONTAINED HEREIN

SUBMITTALS:

THE CONTRACTOR SHALL PROVIDE THE ENGINEER OF RECORD AND THE BUILDING OFFICIAL SUBMITTALS FOR APPROVAL , STAMPED BY A REGISTERED OREGON SE AS REQUIRED, PRIOR TO CONSTRUCTION, FOR THE FOLLOWING ITEMS:

1. STEEL FABRICATION SHOP DRAWINGS, MATERIAL CERTIFICATIONS & WELDING PROCEDURES
2. CONCRETE MIX DESIGN AND PROPOSED ADMIXTURES
3. CMU REINFORCING SHOP DRAWINGS
4. GROUT MIX DESIGN
5. MANUFACTURED TRUSS SHOP DRAWINGS AND CALCULATIONS
6. PILE INSTALLATION PROCEDURE
7. FIELD LOCATED EXISTING GROUTED MASONRY CELLS FOR NEW ANCHORAGE
8. MECHANICAL, ELECTRICAL, & MISC. EQUIPMENT ANCHORAGE AND BRACING DESIGNS

NO.	DATE	BY	REVISION

NOTICE
0 1
IF THIS BAR DOES NOT MEASURE 1" THEN DRAWING IS NOT TO SCALE

RAH DESIGNED
RAH DRAWN
MWP CHECKED

STRUCTURAL REGISTERED PROFESSIONAL ENGINEER 74256PE OREGON JULY 08, 2008 MICHAEL WARD PUNTNEY
EXPIRES 12/31/16

MSA
Murray, Smith & Associates, Inc.
Engineers/Planners
121 S.W. Salmon, Suite 900
Portland, Oregon 97204
PHONE 503-225-9010
FAX 503-225-9022

CITY OF ALBANY OREGON

CITY OF ALBANY, OREGON
RAW WATER PUMP STATION SAND REMOVAL IMPROVEMENTS

GENERAL STRUCTURAL NOTES

PROJECT NO.: 12-1397.223 | SCALE: AS SHOWN | DATE: OCTOBER 2016

SHEET
S-1

SPECIAL INSPECTIONS:

1. AN INDEPENDENT TESTING LABORATORY CHOSEN BY THE OWNER SHALL PROVIDE SPECIAL INSPECTIONS IN ACCORDANCE WITH CHAPTER 17 OF THE INTERNATIONAL BUILDING CODE FOR THE STRUCTURAL SYSTEMS OUTLINED HEREIN. ALL OTHER ELEMENTS SHALL COMPLY WITH THE SPECIAL INSPECTION & TESTING REQUIREMENTS OF CHAPTER 17 OF THE INTERNATIONAL BUILDING CODE.
2. THE TESTING AGENCY SHALL PROVIDE THE ENGINEER OF RECORD, THE OWNER, AND THE BUILDING OFFICIAL COPIES OF ALL RELEVANT TEST REPORTS AND SPECIAL INSPECTIONS.
3. SPECIAL INSPECTION COMPANIES SHALL BE SUBMITTED TO, AND APPROVED BY, THE ENGINEER PRIOR TO USE.

TABLE 1

REQUIRED GEOTECHNICAL SPECIAL INSPECTIONS

SYSTEM or MATERIAL	INSPECTION: IBC CODE REFERENCE	CODE or STANDARD REFERENCE	FREQUENCY: Continuous	FREQUENCY: Periodic	REMARKS
SOILS					
GEOTECHNICAL INVESTIGATIONS	1803				GEOTECHNICAL INVESTIGATION SHALL INCLUDE ITEMS OF SPECIAL INSPECTION AND TESTING AS NOTED IN TABLE 5 OF THE GUIDELINES
VERIFY FOOTING BEARING CAPACITY AND SUBGRADE PREPARATION FOR FILLS	TABLE 1705.6	PER SPECIFICATIONS		X (a)	BY THE GEOTECHNICAL ENGINEER
FILL MATERIAL VERIFICATION				X	
FILL PLACEMENT & COMPACTION				X	
PERFORM CLASSIFICATION OF COMPACTED FILL MATERIALS	TABLE 1705.6 1803.5.1			X	
VERIFY USE OF PROPER MATERIALS, DENSITIES AND LIFT THICKNESSES DURING PALCMENT AND COMPACTION OF COMPACTED FILL	TABLE 1705.6			X	TESTING PER GEOTECHNICAL REPORT
PRIOR TO PLACEMENT OF COMPACTED FILL OBSERVE SUBGRADE AND VERIFY THAT SITE HAS BEEN PREPARED PROPERLY	TABLE 1705.6			X	BY THE GEOTECHNICAL ENGINEER
DRIVEN DEEP FOUNDATIONS					
INSTALLATION	1705.7	PER SPECIFICATIONS	X		BY THE GEOTECHNICAL ENGINEER
VERIFY ELEMENT MATERIALS, SIZES AND LENGTHS COMPLY WITH THE REQUIREMENTS	TABLE 1705.7		X		
DETERMINE CAPACITIES OF TEST ELEMENTS AND CONDUCT ADDITIONAL LOAD TESTS, AS REQUIRED	TABLE 1705.7		X		OBSERVATION BY GEOTECHNICAL ENGINEER
OBSERVE DRIVING OPERATIONS AND MAINTAIN COMPLETE AND ACCURATE RECORDS FOR EACH ELEMENT	TABLE 1705.7		X		
VERIFY PLACEMENT LOCATIONS AND PLUMBNESS, CONFIRM TYPE AND SIZE OF HAMMER, RECORD NUMBER OF BLOWS PER FOOT OF PENETRATION, DETERMINE REQUIRED PENETRATIONS TO ACHIEVE DESIGN CAPACITY, RECORD TIP AND BUTT ELEVATIONS AND DOCUMENT AND DAMAGE TO FOUNDATION ELEMENT	TABLE 1705.7		X		
FOR STEEL ELEMENTS, PERFORM ADDITIONAL INSPECTIONS IN ACCORDANCE WITH SECTION 1704.3	TABLE 1705.7				

TABLE 2

REQUIRED STRUCTURAL SPECIAL INSPECTIONS

SYSTEM or MATERIAL	INSPECTION: IBC CODE REFERENCE	CODE or STANDARD REFERENCE[d]	FREQUENCY[c]: Continuous	FREQUENCY[c]: Periodic	REMARKS
FABRICATORS					
FABRICATORS	1704.2.5			X	SPECIAL INSPECTIONS APPLY TO VERIFICATION OF DETAILED FABRICATION AND QUALITY CONTROL PROCEDURES INCLUDING REVIEW FOR COMPLETENESS AND ADEQUACY RELATIVE TO THE CODE REQUIREMENTS
CONCRETE					
INSPECTION OF REINFORCING STEEL, INCLUDING PRESTRESSING TENDON, AND PLACEMENT	TABLE 1705.3 1910.4	ACI 318: 3.5 ACI 318: 7.1-7.7		X	TOLERANCES AND REINFORCING PLACEMENT PER ACI 7.5; SPACING LIMITS FOR REINFORCING ACI 7.6
INSPECTION OF ANCHORS CAST IN CONCRETE WHERE ALLOWABLE LOADS HAVE BEEN INCREASED OR WHERE STRENGTH DESIGN IS USED	TABLE 1705.3 1908.5 1909.1	ACI 318: 8.1.3 ACI 318: 21.1.8		X	ALL BOLTS VISUALLY INSPECTED
INSPECTION OF ANCHORS POST-INSTALLED IN HARDENED CONCRETE MEMBERS[b]	TABLE 1705.3 1909.1	ACI 318: 3.8.6 ACI 318: 8.1.3 ACI 318: 21.1.8		X	
VERIFY USE OF REQUIRED DESIGN MIX	TABLE 1705.3 1904.2 1910.2 1910.3	ACI 318: CH 4 ACI 318: 5.2 - 5.4		X	
INSPECTION OF CONCRETE AND SHOTCRETE PLACEMENT FOR PROPER APPLICATION TECHNIQUES	TABLE 1705.3 1910.6 1910.7 1910.8	ACI 318: 5.9, 5.10	X		
INSPECTION FOR MAINTENANCE OF SPECIFIED CURING TEMPERATRUES AND TECHNIQUES	TABLE 1705.3 1910.9	ACI 318: 5.11-5.13		X	
VERIFICATION OF IN-SITU CONCRETE STRENGTH, PRIOR TO STRESSING OF TENDONS IN POST-TENSIONED CONCRETE AND PRIOR TO REMOVAL OF SHORES AND FROMS FROM BEAMS AND STRUCTURAL SLABS	TABLE 1705.3	ACI 318: 6.2		X	
INSPECT FORMWORK FOR SHAPE, LOCATION AND DIMENTIONS OF THE CONCRETE MEMBER BEING FORMED	TABLE 1705.3	ACI 318: 6.1.1		X	SPECIAL INSPECTIONS APPLY TO SHAPE, LOCATION AND DIMENSIONS OF THE CONCRETE MEMBER BEING FORMED
MASONRY LEVEL C QUALITY ASSURANCE					
COMPLIANCE WITH REQUIRED INSPECTION PROVISIONS OF THE CONSTRUCTION DOCUMENTS AND THE APPROVED SUBMITTALS		TMS 602: 1.5		X	
VERIFICATION OF F'_m AND F'_{AAC} PRIOR TO CONSTRUCTION AND FOR EVERY 5,000 SQUARE FEET DURING CONSTRUCTION		TMS 602: 1.4B		X	
VERIFICATION OF PROPORTIONS OF MATERIALS IN PREMIXED OR PREBLENDED MORTAR AND GROUT AS DELIVERED TO THE SITE		TMS 602: 1.5B		X	
VERIFICATION OF SLUMP FLOW AND VSI AS DELIVERED TO THE SITE FOR SELF-CONSOLIDATING GROUT		TMS 602: 1.5B.1.b.3	X		
VERIFICATION OF SITE-PREPARED MORTAR, GROUT AND PRESTRESSING GROUT FOR BONDED TENDONS		TMS 602: 2.6A		X	
PLACEMENT OF MASONRY UNITS AND MORTAR JOINT CONSTRUCTION		TMS 602: 3.3B		X (a)	
VERIFICATION OF SIZE AND LOCATION OF STRUCTURAL ELEMENTS		TMS 602: 3.3F		X	
TYPE, SIZE AND LOCATION OF ANCHORS, INCLUDING OTHER DETAILS OF ANCHORAGE OF MASONRY TO STRUCTURAL MEMBERS, FRAMES OR OTHER CONSTRUCTION		TMS 402: 1.16.1 TMS 402: 1.2.2 (e)	X		(b)
TYPE, GRADE, AND SIZE OF REINFORCING STEEL, ANCHOR BOLTS, PRESTRESSING TENDONS AND ANCHORAGES		TMS 402: 1.15 TMS 602: 2.4 TMS 602: 3.4		X	
PLACEMENT OF REINFORCEMENT, CONNECTORS, PRESTRESSING TENDON AND ANCHORAGE		TMS 402: 1.15 TMS 602: 3.4 TMS 602: 3.6A		X (a)	
PREPARATION, CONSTRUCTION, AND PROTECTION DURING COLD WEATHER (TEMPERATURE BELOW 40°F) AND HOT WEATHER (TEMPERATURE ABOVE 90°F)	2104.3 2104.4	TMS 602: 1.8C TMS 602: 1.8D		X (a)	
GROUT PLACEMENT		TMS 602: 3.5	X		
GROUT SPACE PRIOR TO GROUTING		TMS 602: 3.2D	X		
PREPARATION OF ANY REQUIRED GROUT SPECIMENS, MORTAR SPECIMENS AND/OR PRISMS SHALL BE OBSERVED	2105.2.2 2105.3	TMS 602: 1.4	X		
STEEL					
FABRICATION OF STRUCTURAL ELEMENTS	1704.2.5			X	REFER TO INSPECTION OF FABRICATOR REQUIREMENTS
MATERIAL VERIFICATION OF STRUCTURAL STEEL	1705.2 2203.1	ASTM A6 AISC 360 A3.1		X	CERTIFIED MILL TEST REPORTS
MATERIAL VERIFICATION OF HIGH STRENGTH BOLTS	1705.2	AISC 360 A3.3		X	MANUFACTURER'S CERTIFIED TEST REPORTS
MATERIAL VERIFICATION OF ANCHOR BOLTS AND THREADED RODS	1705.2	AISC 360 A3.4		X	MANUFACTURER'S CERTIFIED TEST REPORTS
MATERIAL VERIFICATION OF WELD FILLER METALS	1705.2	AISC 360 A3.5		X	MANUFACTURER'S CERTIFIED TEST REPORTS

TABLE 2 CONTINUED

REQUIRED STRUCTURAL SPECIAL INSPECTIONS

SYSTEM or MATERIAL	INSPECTION: IBC CODE REFERENCE	CODE or STANDARD REFERENCE[d]	FREQUENCY[c]: Continuous	FREQUENCY[c]: Periodic	REMARKS
VERIFYING USE OF PROPER WPS'S				X	COPY OF WELDING PROCEDURE SPECIFICATIONS
COMPLETE AND PARTIAL PENETRATION GROOVE WELDS	1705.2.2.1	AWS D1.1 SECTION 6	X		ALL WELDS VISUALLY INSPECTED PER AWS D1.1 6.9
MULTIPASS FILLET WELDS			X		
SINGLE PASS FILLET WELDS GREATER THAN 5/16"			X		
SNUG-TIGHT HIGH STRENGTH BOLT INSTALLATION	2204.2	RCSC SPECIFICATION FOR STRUCTURAL JOINTS USING ASTM A325 OR A490 BOLTS SECTION 9		X	ALL CONNECTIONS VISUALLY INSPECTED
PRETENSIONED HIGH STRENGTH BOLT INSTALLATION USING TURN-OF-THE-NUT METHOD WITHOUT MATCH MARKING OR CALIBRATED WRENCH METHOD	2204.2		X		ALL CONNECTIONS VISUALLY INSPECTED
VERIFICATION OF FRAME JOINT DETAILS INCLUDING MEMBER AND COMPONENT LOCATIONS, BRACING, AND STIFFENERS	1705			X	
B) REINFORCING STEEL	TABLE 1705.2.2.				
1) VERIFICATION OF WELDABILITY OF REINFORCING STEEL OTHER THAN ASTM A706		AWS D1.4 ACI 318: SECTION 3.5.2		X	
1. FABRICATION OF HIGH-LOAD DIAPHRAGMS:					
A. VERIFY STRUCTURAL PANEL GRADE AND THICKNESS	1704.1 1704.6.1 TABLE 2305.2.1 (2)			X	
B. VERIFY NOMINAL SIZE OF FRAMING MEMBERS AT ADJOINING PANEL EDGES	1704.6.1 TABLE 2305.2.1 (2)			X	
C. VERIFY NAIL OR STAPLE DIAMETER	1704.6.1 1704.6.1			X	
PREFABRICATED WOOD SHEAR PANELS	1703.4 1704.15.3	ICC EVALUATION REPORT		X	SPECIAL INSPECTIONS APPLY TO HOLDOWN ANCHOR SIZE AND PLACEMENT, INCLUDING EMBEDMENT LENGTH, SPACING, AND EDGE DISTANCE

a. WHERE APPLICABLE, SEE ALSO SECTION 1705.11, SPECIAL INSPECITONS FOR SEISMIC RESISTANCE

b. SPECIFIC REQUIREMENTS FOR SPECIAL INSPECTION SHALL BE INCLUDED IN THE RESEARCH REPORT FOR THE ANCHOR ISSUED BY AN
c. FREQUENCY REFERS TO THE FREQUENCY OF INSPECTION, WHICH MAY BE CONTINUOUS DURING THE TASK LISTED OR PERIODICALLY DURING THE LISTED TASK, AS DEFINED IN THE TABLE.
d. REQUIRED FOR THE FIRST 5000 SQUARE FEET OF AAC MASONRY.
e. THE FABRICATOR OR ERECTOR, AS APPLICABLE SHALL MAINTAIN A SYSTEM BY WHICH A WELDER WHO HAS WELDED A JOINT OF MEMBER CAN BE IDENTIFIED. STAMPS, IF USED, SHALL BE THE LOW-STRESS TYPE.
f. WHEN WELDING OF DOUBLER PLATES, CONTINUITY PLATES OR STIFFENERS HAS BEEN PERFORMED IN k-AREA, VISUALLY INSPECT THE WEB k-

TABLE 5

REQUIRED TESTING for SPECIAL INSPECTIONS

SYSTEM or MATERIAL	TESTING: IBC CODE REFERENCE	CODE or STANDARD REFERENCE	FREQUENCY: Continuous	FREQUENCY: Periodic	REMARKS
GEOTECHNICAL					
GEOTECHNICAL ENGINEER TO PERFORM TESTING OF COMPACTED FILL MATERIALS	1803			X	TESTING PER GEOTECHNICAL REPORT
FILL IN-PLACE DENSITY OR PREPARED SUBGRADE DENSITY		VARIES; MINIMUM PER IBC APPENDIX J107.5		X	TESTING PER GEOTECHNICAL REPORT
MATERIAL VERIFICATION	TABLE 1705.6 1803.5.1	VARIES; CLASSIFICATION AND TESTING OF CONTROLLED FILL MATERIALS		X	BY THE GEOTECHNICAL ENGINEER
CONCRETE					
AT THE TIME FRESH CONCRETE IS SAMPLED TO FABRICATE SPECIMENS FOR STRENGTH TESTS, PERFORM SLUMP AND AIR CONTENT TESTS, AND DETERMINE THE TEMPERATURE OF THE CONCRETE	TABLE 1705.3 1910.10	ASTM C 172 ASTM C 31 ACI 318: 5.6, 5.8	X		FABRICATE SPECIMENS AT TIME FRESH CONCRETE IS PLACED ONCE EACH DAY FOR A GIVEN CLASS OF CONCRETE, OR LESS THAN ONCE FOR EACH 150 YDS OF CONCRETE, OR LESS THAN ONCE FOR EACH 5,000 FT2 OF SURFACE AREA FOR SLABS/WALLS. ONCE EACH SHIFT FROM IN-PLACE WORK OR FROM TEST PANEL AND MINIMUM ONE SPECIMEN FOR EACH 50 CUBIC YARDS. "PRECONSTRUCTION TESTS AS REQUIRED PER THE BUILDING OFFICIAL."
CONCRETE STRENGTH	TABLE 1705.3 1910.10.1	ASTM C39	X		
CONCRETE SLUMP		ASTM C143	X		
CONCRETE AIR CONTENT		ASTM C231	X		
CONCRETE TEMPERATURE		ASTM C1064	X		
MASONRY					
UNIT STRENGTH METHOD		ASTM C62 ASTM C216 ASTM C652 ASTM C476 ASTM C55 ASTM C90			
COMPRESSIVE STRENGTH OF MORTAR		MIA - INSPECTOR'S HANDBOOK ASTM C780			(1) TEST PER DAY FOR 3 CONSECUTIVE WORK DAYS AT THE START OF THE JOB. ONE TEST SHALL CONSIST OF 3 SPECIMENS. AFTER THE FIRST THREE TESTS, SPECIMENS FOR CONTINUING QUALITY CONTROL SHALL BE TAKEN ONCE A WEEK OR FOR EVERY 5,000 SQ. FT. OF WALL, WHICHEVER IS FIRST.
COMPRESSIVE STRENGTH OF GROUT		MIA - INSPECTOR'S HANDBOOK ASTM C780			AT THE START OF GROUTING OPERATIONS, TAKE ONE TEST PER DAY FOR THE FIRST THREE DAYS. THE TESTS SHALL CONSIST OF 3 SPECIMENS. AFTER THE FIRST 3 TESTS, SPECIMENS FOR CONTINUING QUALITY CONTROL SHALL BE TAKEN ONCE A WEEK OR FOR EVERY 30 CU. YDS. OF GROUT OR FOR EVERY 5,000 SQ. FT. OF WALL, WHICHEVER COMES FIRST.

PSE PETERSON STRUCTURAL ENGINEERS
Peterson Structural Engineers, Inc.
9400 SW Barnes Road, Suite 100
Portland, Oregon 97225
(503) 292-1635
10/25/2016 #12-192

NO.	DATE	BY	REVISION

NOTICE
0 1
IF THIS BAR DOES NOT MEASURE 1" THEN DRAWING IS NOT TO SCALE

RAH DESIGNED
RAH DRAWN
MWP CHECKED

STRUCTURAL REGISTERED PROFESSIONAL ENGINEER 74256PE OREGON JULY 08, 2008 MICHAEL WARD PUNTNEY
EXPIRES 12/31/16

MSA Murray, Smith & Associates, Inc. Engineers/Planners
121 S.W. Salmon, Suite 900 Portland, Oregon 97204
PHONE 503-225-9010 FAX 503-225-9022

CITY OF ALBANY, OREGON
RAW WATER PUMP STATION SAND REMOVAL IMPROVEMENTS

SPECIAL INSPECTION SHEET

PROJECT NO.: 12-1397.223 | SCALE: AS SHOWN | DATE: OCTOBER 2016

SHEET S-2

x:\2012\12-176 To 12-200\12-192\Acad\12-192-03 Albany WTP Sand Removal Improvements - Final Structural Drawings.dwg S-2 10/27/2016 12:33 PM ### 19.1s (LMS Tech)

NOTES:
1. VERIFY ALL DIMENSIONS & PENETRATIONS w/ MECHANICAL, ELECTRICAL, & ARCHITECTURAL DRAWINGS
2. SEE MECHANICAL SHEETS FOR NUMBER & LOCATIONS OF PIPE PENETRATIONS IN FLOOR SLAB OF ADDITION & CORE DRILLING THROUGH EXISTING WALLS.
3. CONCRETE PIER BENEATH PILASTER FROM EL 230.0 TO EL 234.0 WITH CHAMFER TO MATCH EXISTING.
4. SEE CIVIL FOR SLOPES & ELEVATIONS OF SEDIMENT CONTAINMENT SLAB & EXTENSION.

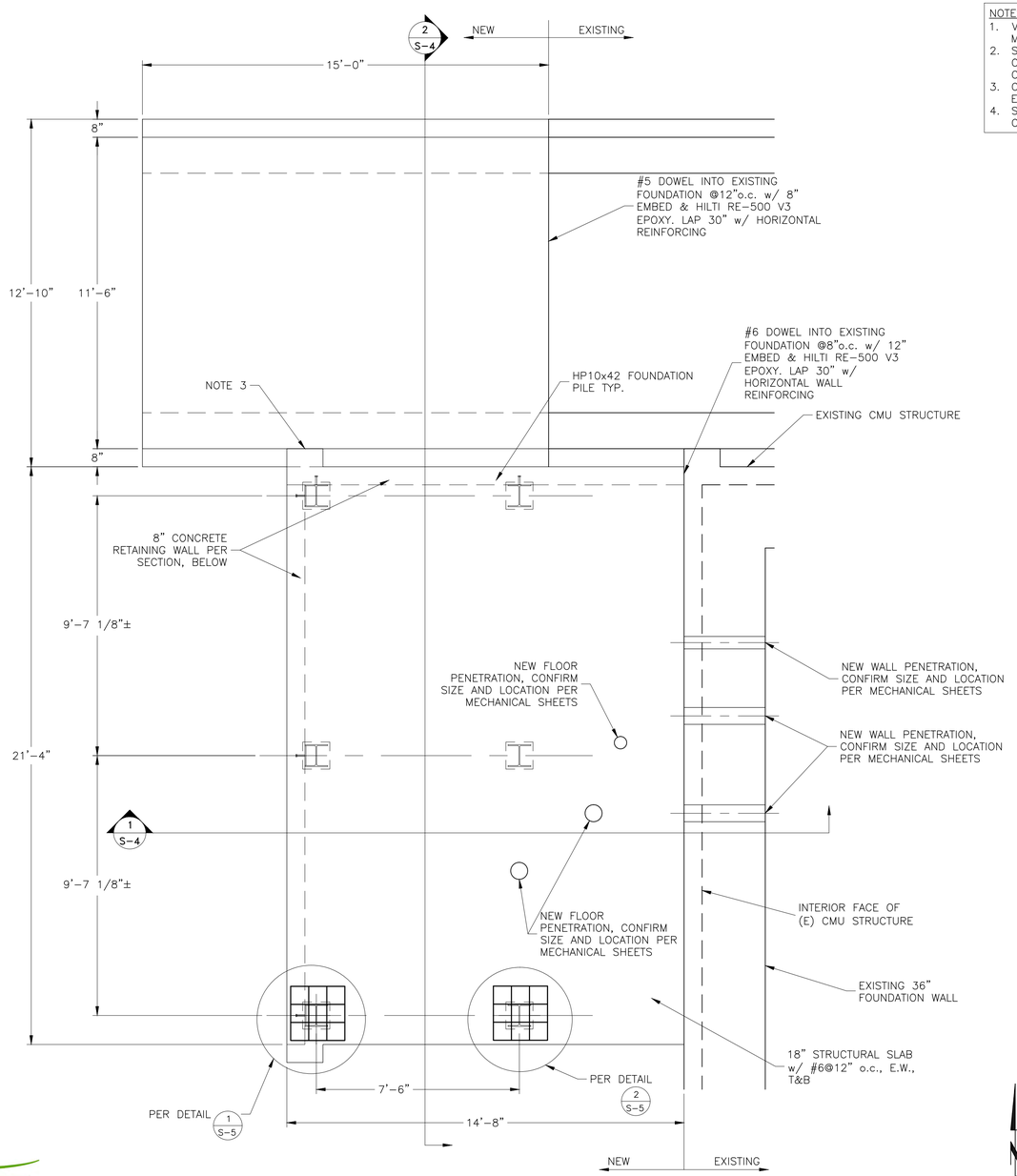

FOUNDATION PLAN 1 S-3
3/8" = 1'-0"

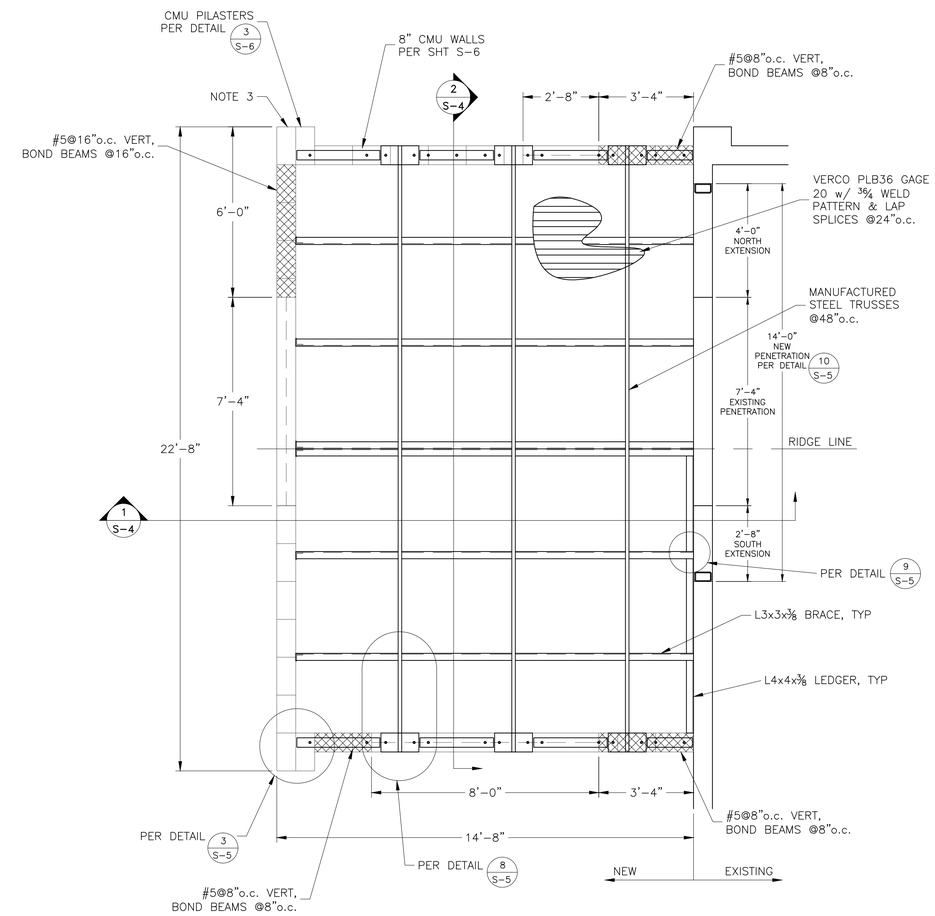

ROOF FRAMING PLAN 1 S-3
3/8" = 1'-0"

PSE
PETERSON STRUCTURAL ENGINEERS
Peterson Structural Engineers, Inc.
9400 SW Barnes Road, Suite 100
Portland, Oregon 97225
(503) 292-1635
10/25/2016 #12-192

NO.	DATE	BY	REVISION

NOTICE
0 1
IF THIS BAR DOES NOT MEASURE 1" THEN DRAWING IS NOT TO SCALE

RAH DESIGNED
RAH DRAWN
MWP CHECKED

STRUCTURAL REGISTERED PROFESSIONAL ENGINEER 74295PE OREGON JULY 08, 2008 MICHAEL WARD PUNTNEY
EXPIRES 12/31/16

MSA Murray, Smith & Associates, Inc. Engineers/Planners
121 S.W. Salmon, Suite 900 Portland, Oregon 97204
PHONE 503-225-9010
FAX 503-225-9022

CITY OF ALBANY, OREGON
RAW WATER PUMP STATION SAND REMOVAL IMPROVEMENTS

FOUNDATION PLAN & ROOF FRAMING PLAN

PROJECT NO.: 12-1397.223 | SCALE: AS SHOWN | DATE: OCTOBER 2016

SHEET S-3

X:\2012\12-176 To 12-200\12-192\Acad\12-192-03 Albany WTP Sand Removal Improvements - Final Structural Drawings.dwg S-3 10/27/2016 12:33 PM ### 19.1s (LMS Tech)

NOTES:
1. VERIFY ALL DIMENSIONS & PENETRATIONS w/ MECHANICAL, ELECTRICAL, & ARCHITECTURAL DRAWINGS
2. ELEMENTS OF EXISTING STRUCTURE BEYOND NOT SHOWN FOR CLARITY

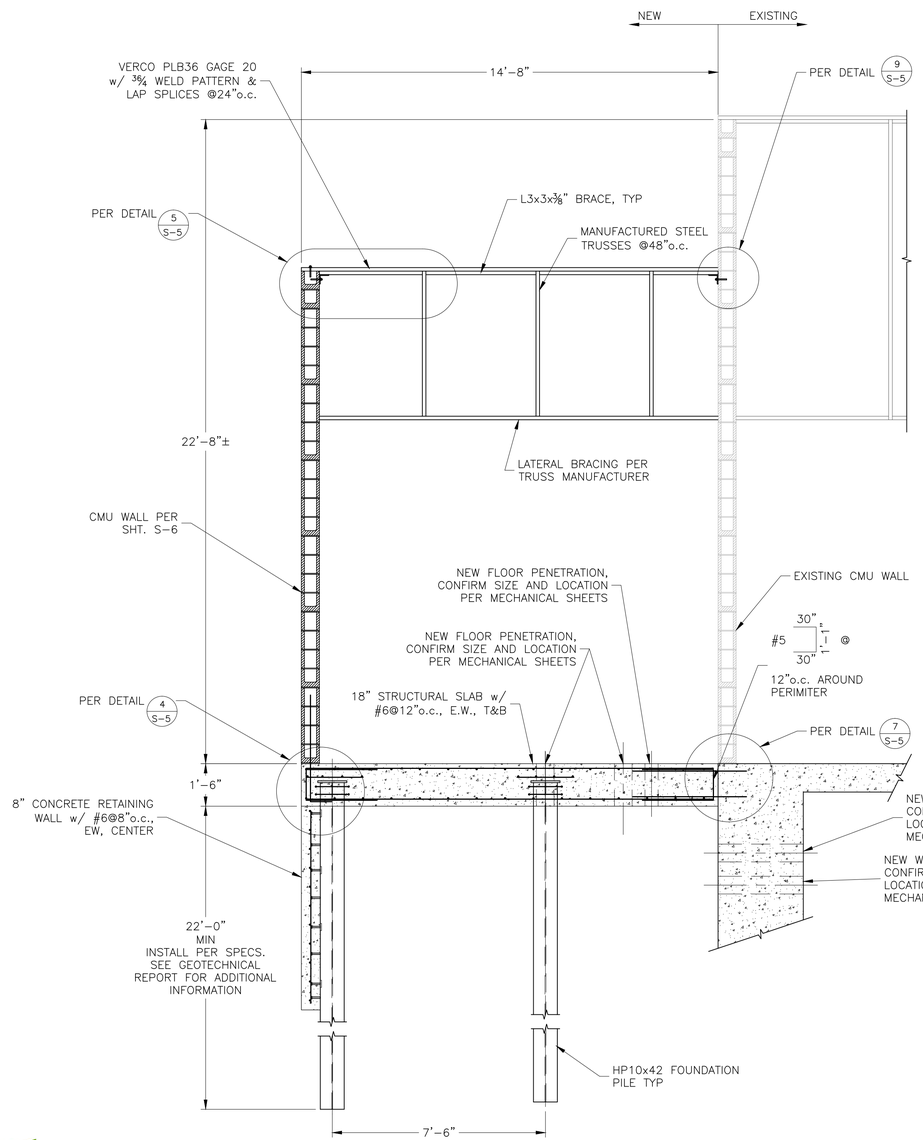

SECTION 1/S-3
3/8" = 1'-0"

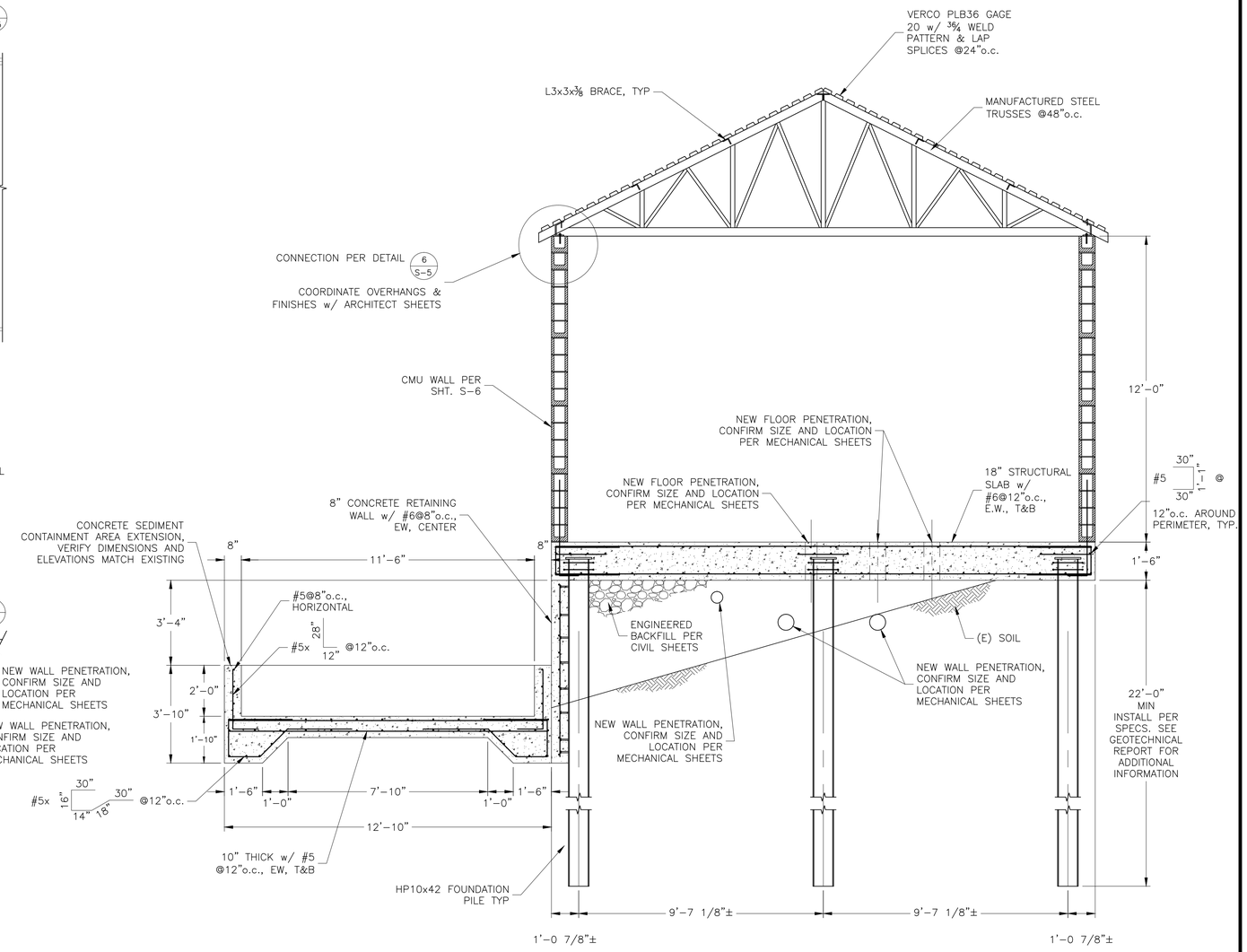

SECTION 2/S-3
3/8" = 1'-0"

PSE
PETERSON STRUCTURAL ENGINEERS
Peterson Structural Engineers, Inc.
9400 SW Barnes Road, Suite 100
Portland, Oregon 97225
(503) 292-1635
10/25/2016 #12-192

NO.	DATE	BY	REVISION

NOTICE
0 1
IF THIS BAR DOES NOT MEASURE 1" THEN DRAWING IS NOT TO SCALE

RAH DESIGNED
RAH DRAWN
MWP CHECKED

STRUCTURAL REGISTERED PROFESSIONAL ENGINEER 74256PE OREGON JULY 08, 2008 MICHAEL WARD PUNTNEY
EXPIRES 12/31/16

MSA Murray, Smith & Associates, Inc. Engineers/Planners
121 S.W. Salmon, Suite 900 Portland, Oregon 97204
PHONE 503-225-9010 FAX 503-225-9022

CITY OF ALBANY, OREGON
RAW WATER PUMP STATION SAND REMOVAL IMPROVEMENTS

SECTIONS

PROJECT NO.: 12-1397.223 | SCALE: AS SHOWN | DATE: OCTOBER 2016

SHEET S-4

X:\2012\12-176 To 12-200\12-192\Acad\12-192-03 Albany WTP Sand Removal Improvements - Final Structural Drawings.dwg S-4 10/27/2016 12:51 PM ### 19.1s (LMS Tech)

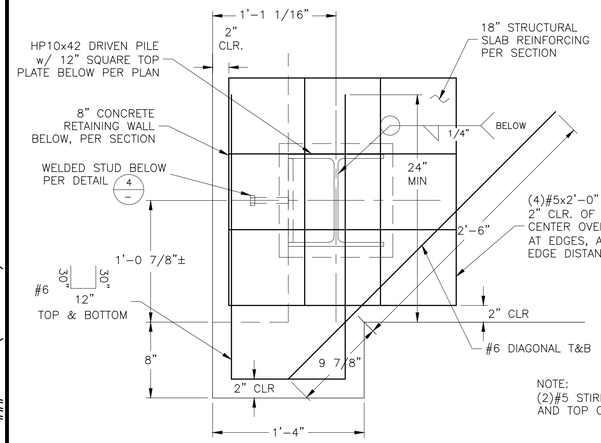

PILE TO SLAB CONNECTION @ CORNER (1/S-3)

1-1/2" = 1'-0"

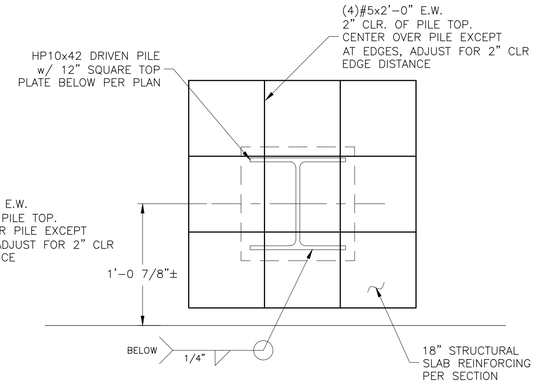

NOTE:
(2)#5 STIRRUPS BETWEEN BOTTOM OF SLAB AND TOP OF PILE NOT SHOWN FOR CLARITY

PILE TO SLAB CONNECTION (2/S-3)

1-1/2" = 1'-0"

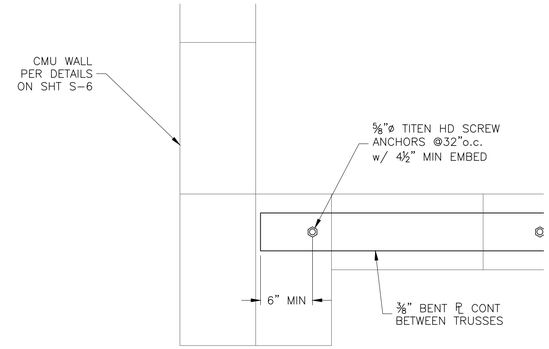

TRUSS TO WALL CONNECTION (3/S-3)

1-1/2" = 1'-0"

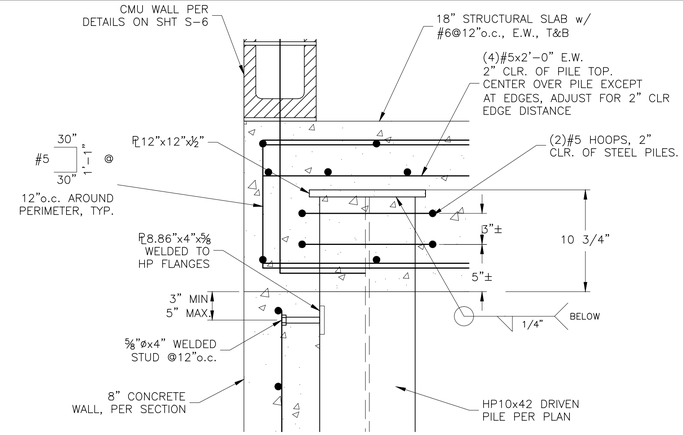

PILE TO SLAB CONNECTION @ EDGE (4/S-4)

1-1/2" = 1'-0"

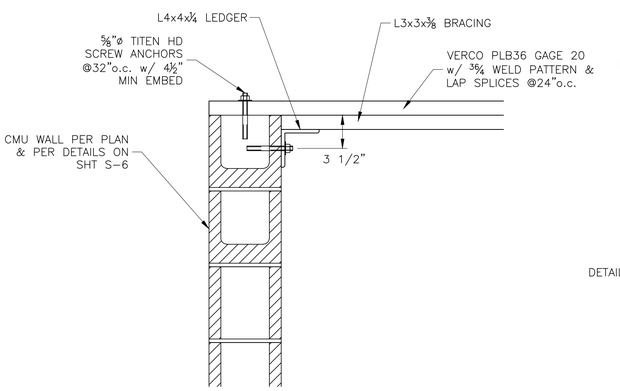

RIDGE TO CMU CONNECTION (5/S-4)

1-1/2" = 1'-0"

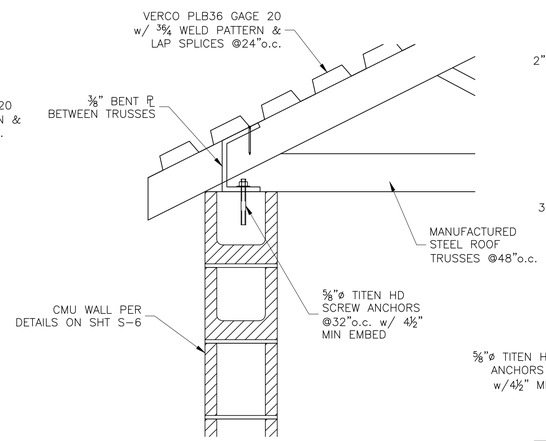

TRUSS TO WALL CONNECTION (6/S-4)

1-1/2" = 1'-0"

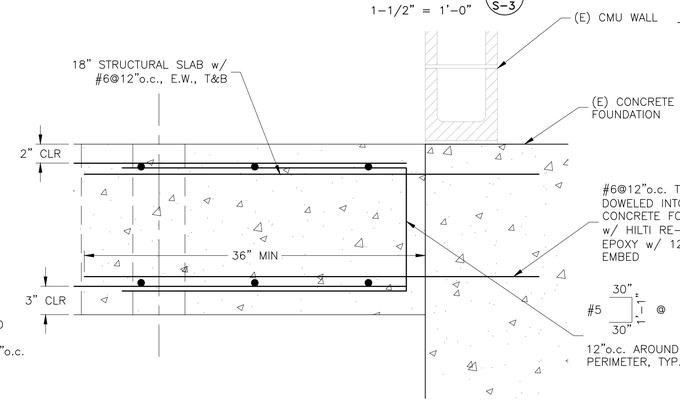

TRUSS TO WALL CONNECTION (7/S-4)

1-1/2" = 1'-0"

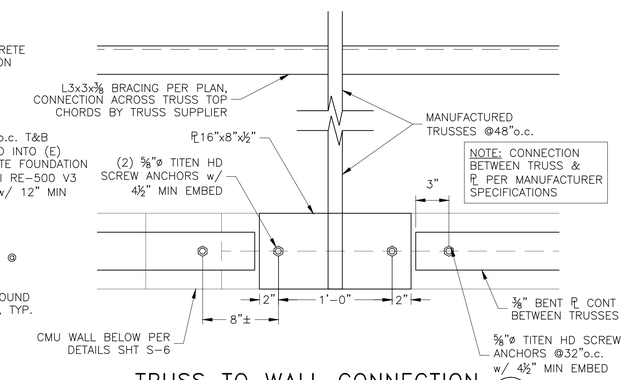

NOTE: CONNECTION BETWEEN TRUSS & PL PER MANUFACTURER SPECIFICATIONS

TRUSS TO WALL CONNECTION (8/S-3)

1-1/2" = 1'-0"

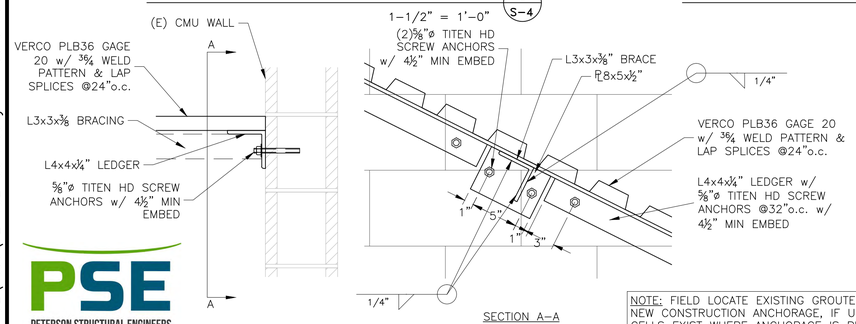

NOTE: FIELD LOCATE EXISTING GROUTED CELLS FOR NEW CONSTRUCTION ANCHORAGE, IF UNGROUTED CELLS EXIST WHERE ANCHORAGE IS REQUIRED SOLID GROUT FOR 12" ABOVE AND BELOW MIN.

CONNECTION DETAIL (9/S-4)

1-1/2" = 1'-0"

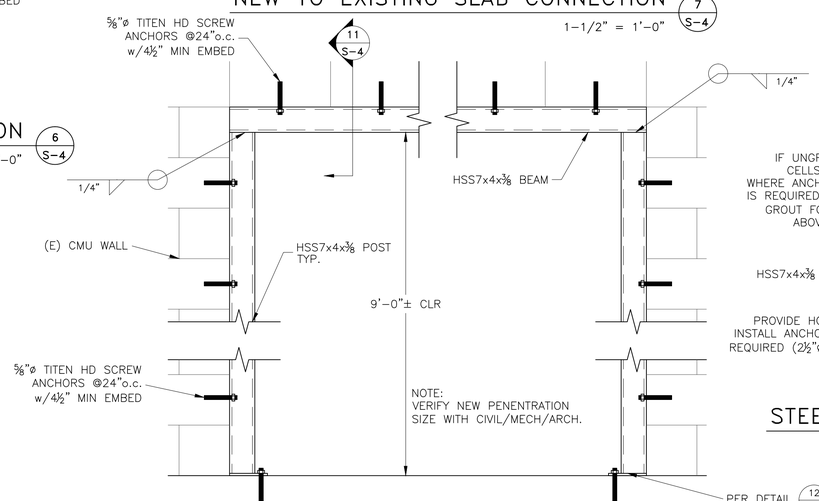

NEW TO EXISTING SLAB CONNECTION (7/S-4)

1-1/2" = 1'-0"

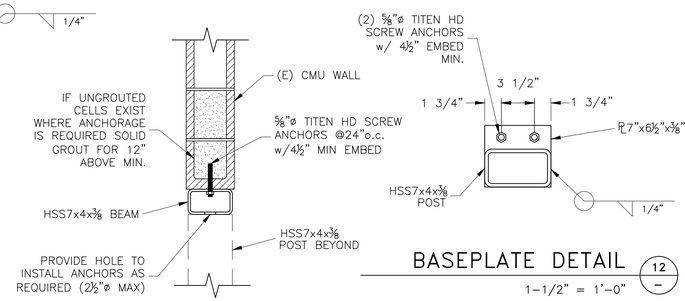

STEEL LINTEL SECTION (11/–)

1" = 1'-0"

BASEPLATE DETAIL (12/–)

1-1/2" = 1'-0"

STEEL LINTEL DETAIL (10/S-3)

1" = 1'-0"

PSE
PETERSON STRUCTURAL ENGINEERS
Peterson Structural Engineers, Inc.
9400 SW Barnes Road, Suite 100
Portland, Oregon 97225
(503) 292-1635
10/25/2016 #12-192

NO.	DATE	BY	REVISION

NOTICE
0 1
IF THIS BAR DOES NOT MEASURE 1" THEN DRAWING IS NOT TO SCALE

RAH DESIGNED
RAH DRAWN
MWP CHECKED

STRUCTURAL REGISTERED PROFESSIONAL ENGINEER 74256PE OREGON MAY 09, 2008 MICHAEL WARD PUNTNEY
EXPIRES 12/31/16

MSA Murray, Smith & Associates, Inc. Engineers/Planners
121 S.W. Salmon, Suite 900 Portland, Oregon 97204
PHONE 503-225-9010 FAX 503-225-9022

CITY OF ALBANY, OREGON
RAW WATER PUMP STATION SAND REMOVAL IMPROVEMENTS

STRUCTURAL DETAILS

PROJECT NO.: 12-1397.223 | SCALE: AS SHOWN | DATE: OCTOBER 2016

SHEET S-5

X:\2012\12-176 To 12-200\12-192\Acad\12-192-03 Albany WTP Sand Removal Improvements - Final Structural Drawings.dwg S-5 10/27/2016 12:51 PM ### 19.1s (LMS Tech)

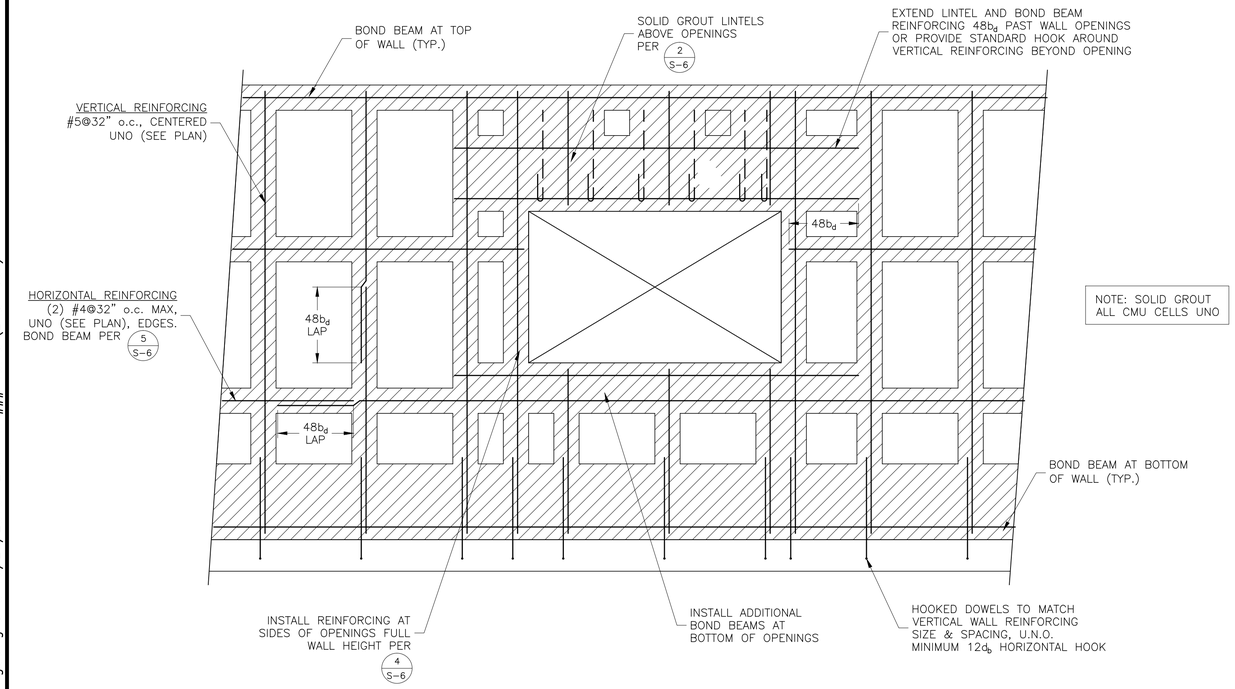

NOTE: SOLID GROUT ALL CMU CELLS UNO

TYPICAL CMU WALL SECTION (1/–)

NOT TO SCALE

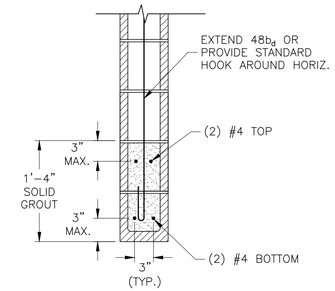

CMU LINTEL DETAIL (2/–)

1" = 1'-0"

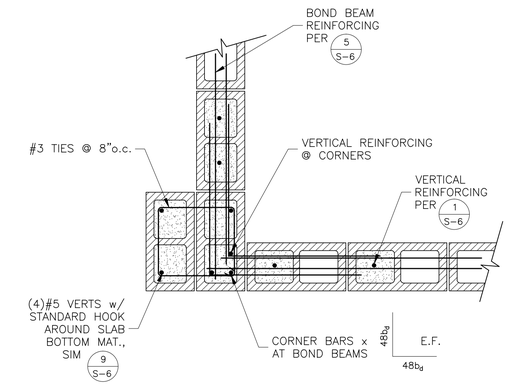

CMU WALL CORNER DETAIL (3/–)

1" = 1'-0"

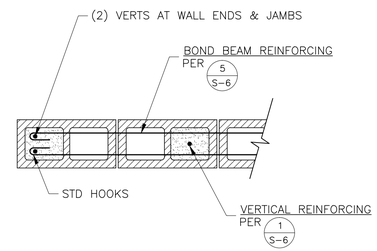

JAMB OR END OF WALL DETAIL (4/S-6)

1" = 1'-0"

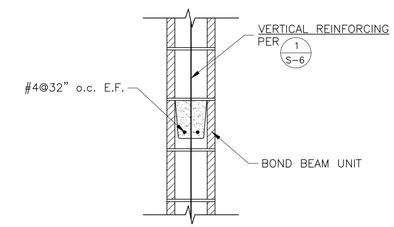

BOND BEAM DETAIL (5/S-6)

1" = 1'-0"

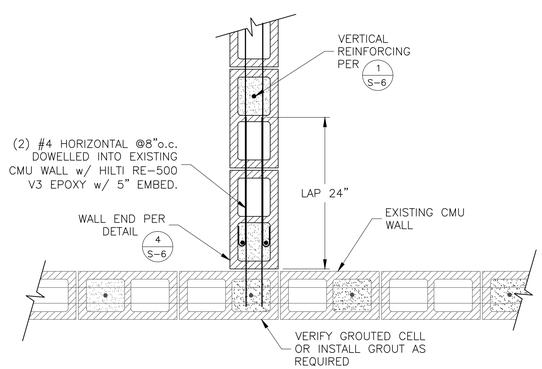

CMU WALL INTERSECTION DETAIL (6/S-6)

1" = 1'-0"

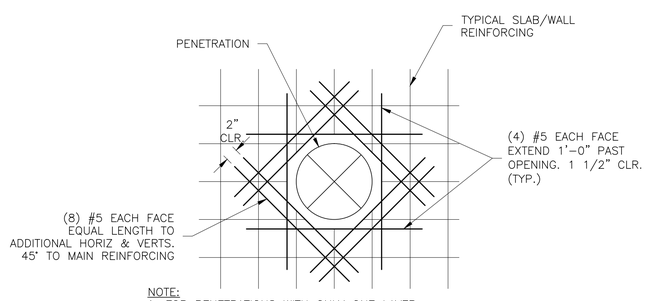

NOTE:
1. FOR PENETRATIONS WITH ONLY ONE LAYER OF STANDARD REINFORCING, INSTALL ONLY ONE LAYER OF ADDITIONAL REINFORCING.
2. FOR PENETRATIONS EXCEEDING 12" IN DIAMETER, EXTEND BARS 2'-0" PAST OPENINGS.

TYP. PENETRATION DETAIL (7/–)

1" = 1'-0"

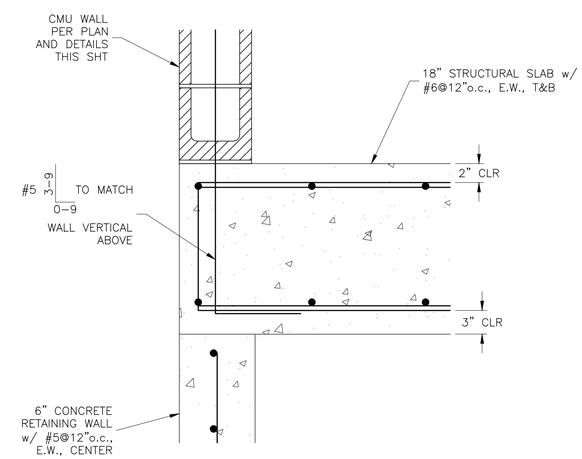

SLAB REINFORCING DETAIL (8/–)

1-1/2" = 1'-0"

PSE
PETERSON STRUCTURAL ENGINEERS
Peterson Structural Engineers, Inc.
9400 SW Barnes Road, Suite 100
Portland, Oregon 97225
(503) 292-1635
10/25/2016 #12-192

NO.	DATE	BY	REVISION

NOTICE
0 1
IF THIS BAR DOES NOT MEASURE 1" THEN DRAWING IS NOT TO SCALE

RAH DESIGNED
RAH DRAWN
MWP CHECKED

STRUCTURAL REGISTERED PROFESSIONAL ENGINEER 142296PE OREGON JULY 08, 2008 MICHAEL WARD FUNTINEY
EXPIRES 12/31/16

MSA Murray, Smith & Associates, Inc. Engineers/Planners
121 S.W. Salmon, Suite 900 Portland, Oregon 97204
PHONE 503-225-9010 FAX 503-225-9022

CITY OF ALBANY, OREGON
RAW WATER PUMP STATION SAND REMOVAL IMPROVEMENTS

STRUCTURAL DETAILS

PROJECT NO.: 12-1397.223 | SCALE: AS SHOWN | DATE: OCTOBER 2016

SHEET S-6

X:\2012\12-176 To 12-200\12-192\Acad\12-192-03 Albany WTP Sand Removal Improvements - Final Structural Drawings.dwg S-6 10/27/2016 12:54 PM ### 19.1s (LMS Tech)

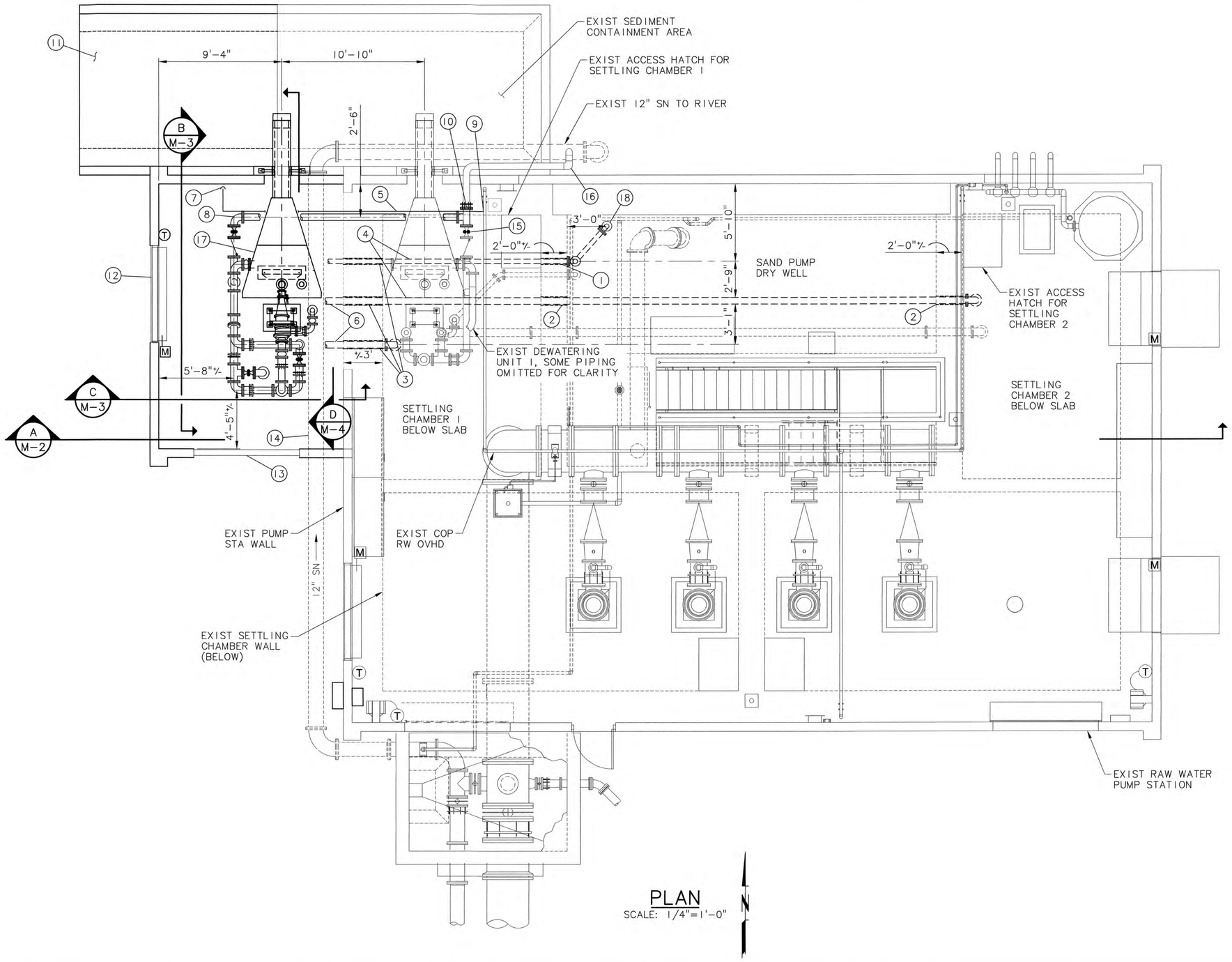

PLAN
SCALE: 1/4"=1'-0"

KEY NOTES:

1. CORE DRILL CONC WALL BENEATH SLAB, INSTALL 4" RW PIPE THROUGH SAND PUMP DRY WELL WEST WALL
2. CORE DRILL CONC WALL BENEATH SLAB, INSTALL 6" DECANT PIPE THROUGH SAND PUMP DRY WELL WEST AND EAST WALL. TERMINATE W/ 90° BEND, FLG DOWN, SEE NOTE 5
3. CORE DRILL CONC WALL BENEATH SLAB, INSTALL TWO (2) 6" PIPES, ONE (1) 4" PIPE, THIS WALL
4. ROUTE PIPES THROUGH SETTLING CHAMBER 1
5. ROUTE 1" COP OVERHEAD, SUPPORT AS REQ'D
6. 6" DECANT WATER FROM DEWATERING UNIT 2 TO SETTLING CHAMBERS
7. 1" COP PIPE DN, SECURE PIPE TO NORTH WALL, TERMINATE 48" AFF, SEE DET 1, SHT M-4
8. 6" DECANT WATER FROM DEWATERING UNIT 2 TO RIVER
9. CUT INTO EXIST 2" COP PIPE W/ 1" COP PIPE, RUN PIPE OVER EXIST AND NEW DEWATERING UNITS TO NORTH WALL, SEE KEY NOTES 5 AND 7
10. 6" DI TEE, FLG, AND 6" SERIES 1000 E-Z FLG ADAPTER, CUT INTO EXIST SST PIPE, ATTACH E-Z FLG TO EXIST PIPE, CONNECT TEE TO EXIST PINCH VALVE AND TO E-Z FLG
11. SEDIMENT CONTAINMENT AREA EXTENSION, SEE STRUCT DWGS
12. EXIST RELIEF LOUVER RELOCATED FROM EXIST WEST WALL TO BLDG EXTENSION WEST WALL
13. OVERHEAD COILING DOOR, SEE ARCH
14. PROTECT EXIST 12" SN BELOW
15. EXIST PINCH VALVE, FLG, TO REMAIN (TYP)
16. EXIST DECANT WATER PIPE TO SN PIPE
17. DEWATERING UNIT 2, SEE SPECS
18. 4" RW FROM SAND PUMP ROOM TO DEWATERING UNIT 2

SHEET NOTES:

1. PLANT PIPING SHOWN IS DUCTILE IRON. PROPOSED ALTERNATE MATERIALS SHALL BE REVIEWED BY OWNER.

2. ALL PIPE, FITTINGS, VALVES, AND APPURTENANCES SHALL BE RATED FOR MINIMUM 150 PSI SERVICE.

3. SUPPORT ALL PIPING BELOW FINISH FLOOR INSIDE BUILDING AS REQUIRED BY SPECIFICATIONS, UNIFORM PLUMBING CODE, AND OREGON STATE BUILDING CODE.

4. ABOVE GROUND PIPING TO BE COATED PER SPECIFICATIONS.

5. CONTRACTOR TO CONFIRM NO CONFLICTS WITH EXISTING PIPE, SUPPORTS AND HANGERS WITHIN DRY WELL PRIOR TO CORE DRILLING. ADJUST ALIGNMENT AND/OR ELEVATION AS NECESSARY TO AVOID CONFLICTS.

NO.	DATE	BY	REVISION

NOTICE
0 ½ 1
IF THIS BAR DOES NOT MEASURE 1" THEN DRAWING IS NOT TO SCALE

AS DESIGNED
HCM DRAWN
MLH CHECKED

REGISTERED PROFESSIONAL ENGINEER 19195 OREGON JULY 15, 1997 MATTHEW L. HICKEY RENEWS 6-30-17

MSA Murray, Smith & Associates, Inc. Engineers/Planners
888 S.W. 5th Ave, Suite 1170 Portland, Oregon 97204 PHONE 503-225-9010 FAX 866-274-9807

CITY OF ALBANY, OREGON
RAW WATER PUMP STATION SAND REMOVAL IMPROVEMENTS

MECHANICAL PLAN

PROJECT NO.: 12-1397.223 | SCALE: AS SHOWN | DATE: OCTOBER 2016

SHEET M-1

G:\PDX_Projects\12\1397\CAD\Sheets\12-1397-OR-M.dwg M-1 10/28/2016 11:39 AM RLF 20.0s (LMS Tech)

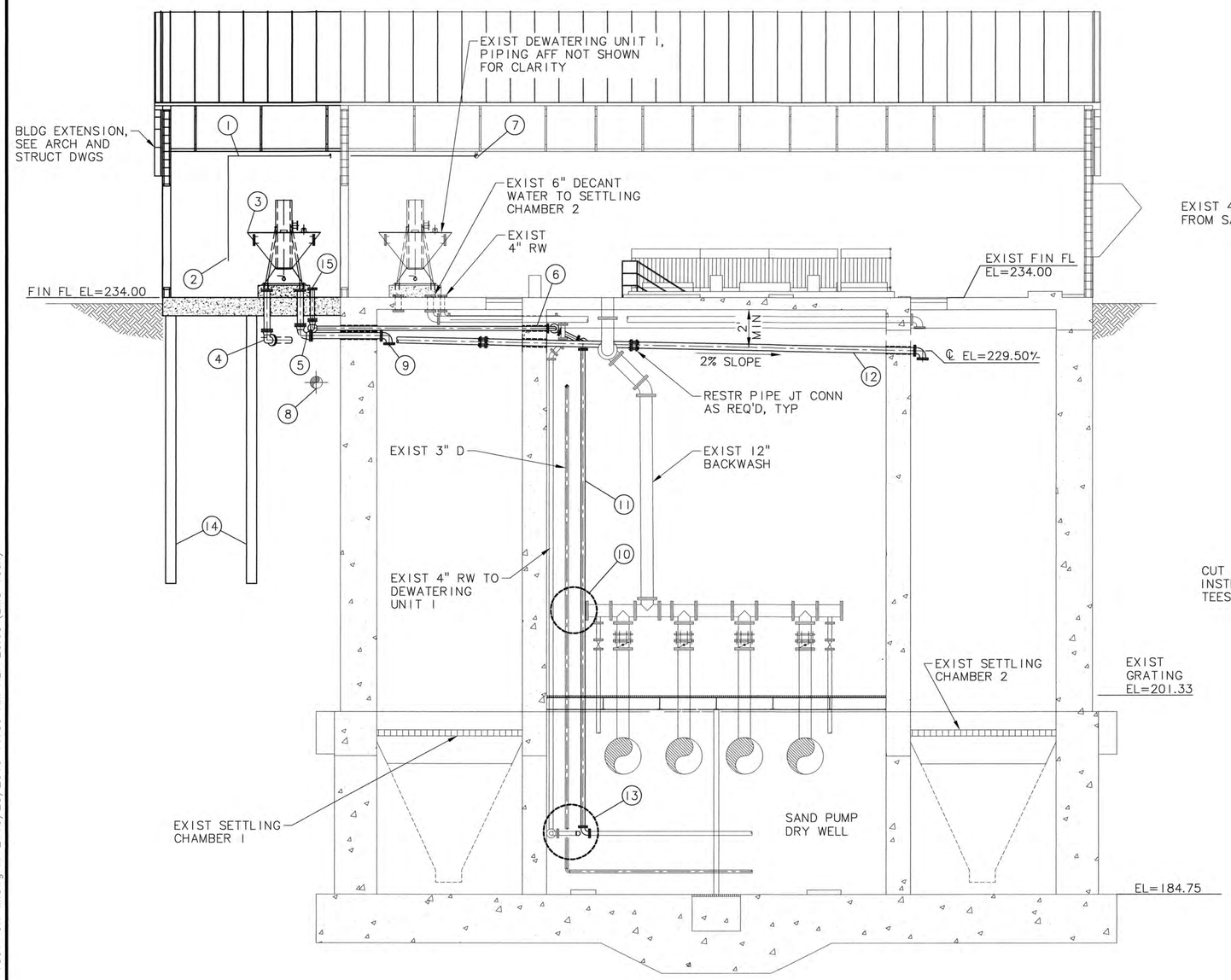

SECTION A / M-1
SCALE: 3/16"=1'-0"

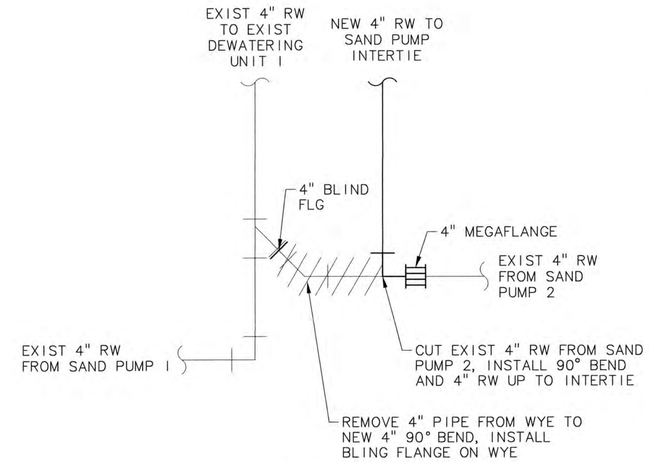

DETAIL 1
SCALE: NTS

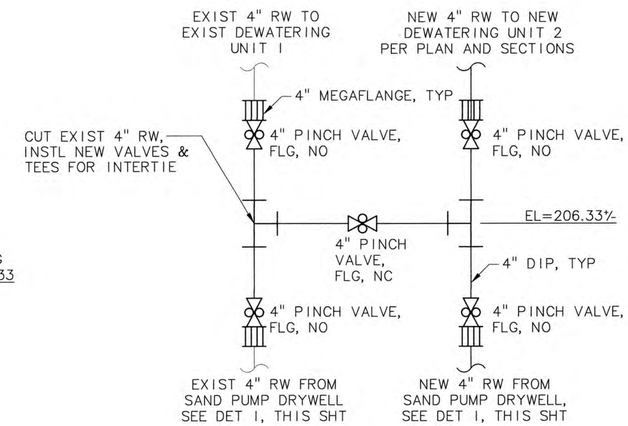

DETAIL 2
SCALE: NTS

KEY NOTES

1. ROUTE 1" RW OVERHEAD PER PLAN
2. SEE DET 1, SHT M-4
3. DEWATERING UNIT 2, PIPING ABOVE FIN FL NOT SHOWN FOR CLARITY, SEE SHT M-3 TO M-5 FOR PIPING AFF
4. 6" DECANT WATER FROM DEWATERING UNIT 2, ROUTE TO SETTLING CHAMBER 2, PER PLAN
5. 6" DECANT WATER FROM DEWATERING UNIT 2, ROUTE TO SETTLING CHAMBER 1, PER PLAN
6. 4" RW PIPE PENETRATION OF SAND PUMP DRY WELL WEST WALL, ROUTE PIPE THROUGH SETTLING CHAMBER 1 TO DEWATERING UNIT 2, PIPE CL EL=231.75
7. CONNECT TO EXIST COP, SEE KEY NOTE 9, SHT M-1
8. EXIST 12" SN PIPE, CONTRACTOR TO POTHOLE TO DETERMINE DEPTH
9. TERMINATE 6" DECANT WATER IN SETTLING CHAMBER 1 W/ 90° BEND DN, FLG
10. SAND PUMP RW PIPE INTERTIE, SEE DET 2, THIS SHT
11. 4" RW TO DEWATERING UNIT 2, PROVIDE GALV STL PIPE SUPPORTS AS REQ'D SIMILAR TO EXIST PIPE SUPPORTS, 10' MAX SPACING, SEE SHT NOTE 3
12. 6" DI SPL, MJxPE, TYP, RESTRAIN JOINT W/ MEGALUGS, TERMINATE 6" DECANT WATER IN SETTLING CHAMBER 2, EXTEND 4" INTO CHAMBER
13. 4" PIPING CONNECTION, SEE DET 1, THIS SHT
14. PILE FOUNDATION, SEE STRUCT DWGS
15. 4" RW TO DEWATERING UNIT 2, SEE SECTIONS ON SHTS M-3 AND M-4

SHEET NOTES:

1. PLANT PIPING SHOWN AS DUCTILE IRON, ALTERNATE MATERIALS TO BE APPROVED BY THE OWNER.

2. ALL PIPE, FITTINGS, VALVES, AND APPURTENANCES SHALL BE RATED FOR MINIMUM 150 PSI SERVICE.

3. SUPPORT ALL BELOW FIN FL PIPING INSIDE BUILDING AS REQUIRED BY UNIFORM PLUMBING CODE AND OREGON STATE BUILDING CODE, SEE SPECIFICATION. PIPE BRACKETS TO BE ¼" THICK & 1½" WIDE. FLAT BAR MOUNTED TO CONC WALL WITH 2-1/2" OC EPOXY ANCHORS.

4. ABOVE GROUND PIPING TO BE COATED PER SPECIFICATIONS.

5. GROUT ALL PIPE PENETRATIONS THROUGH EXIST CONCRETE WALLS.

NO.	DATE	BY	REVISION

NOTICE: 0 ½ 1 — IF THIS BAR DOES NOT MEASURE 1" THEN DRAWING IS NOT TO SCALE

AS DESIGNED
HCM DRAWN
MLH CHECKED

REGISTERED PROFESSIONAL ENGINEER 19195 OREGON JULY 15, 1997 MATTHEW L. HICKEY — RENEWS 6-30-17

MSA Murray, Smith & Associates, Inc. Engineers/Planners
888 S.W. 5th Ave, Suite 1170 Portland, Oregon 97204 PHONE 503-225-9010 FAX 866-274-9807

CITY OF ALBANY, OREGON
RAW WATER PUMP STATION SAND REMOVAL IMPROVEMENTS

MECHANICAL BUILDING SECTION

PROJECT NO.: 12-1397.223 | SCALE: AS SHOWN | DATE: OCTOBER 2016

SHEET M-2

G:\PDX_Projects\12\1397\CAD\Sheets\12-1397-OR-M.dwg M-2 10/28/2016 11:39 AM RLF 20.0s (LMS Tech)

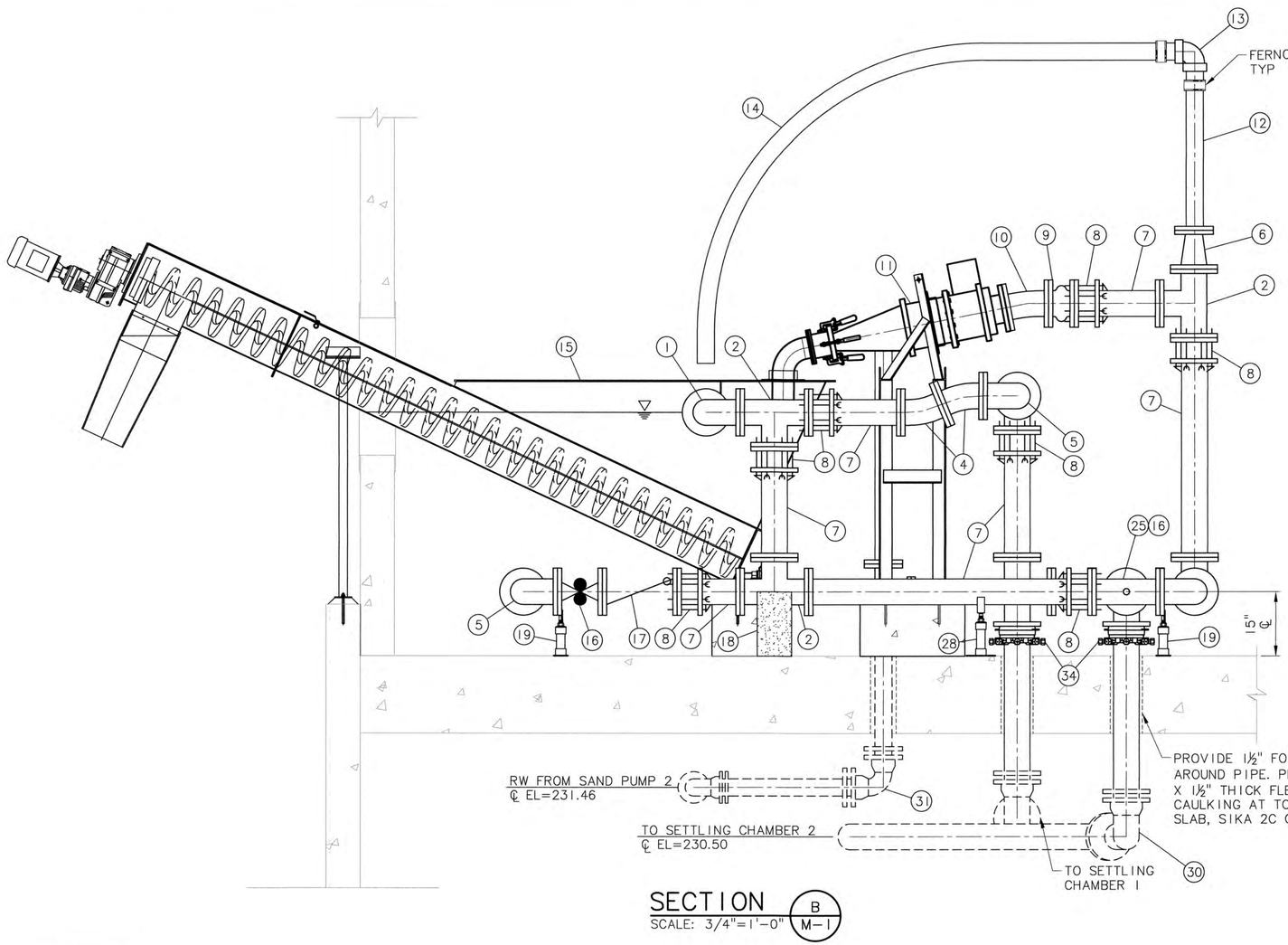

SECTION B M-1
SCALE: 3/4"=1'-0"

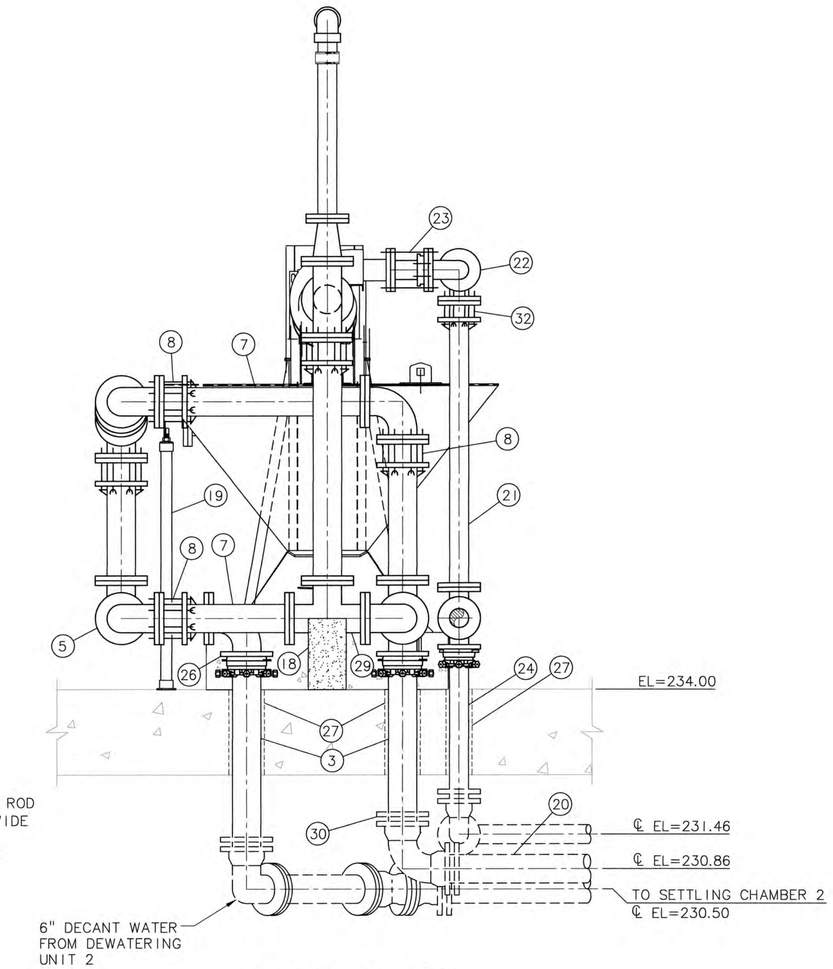

SECTION C M-1
SCALE: 3/4"=1'-0"

KEY NOTES

1. 6" DI 90° BEND, FLG, CONNECT TO HOPPER WITH 6" REST EXP JT W/ TWO (2) CONTROL UNITS
2. 6" DI TEE, FLG
3. 6" DI SPL, PExPE, LENGTH AS REQ'D
4. 6" DI 22 1/2° BEND, FLG
5. 6" DI 90° BEND, FLG
6. 6" X 4" DI RDCR, FLG
7. 6" DI SPL, FLGxPE, LENGTH AS REQ'D
8. 6" RFCA
9. 6" RESTR EXP JT W/ TWO (2) CONTROL UNITS
10. 6" DI 11 1/4° BEND, FLG
11. HYDROCYCLONE, SEE SPECIFICATIONS
12. 4" DI SPL, FLGxPE, LENGTH AS REQ'D, TERMINATE APPROX 12" BELOW BOTTOM CHORD OF ROOF TRUSS
13. 4" SCHED 80 PVC 90° BEND WITH NIPPLES ON EACH END, CONNECT TO DI PIPE AND FLEX HOSE W/ FERNCO COUPLING
14. 4" FLEXIBLE HOSE, SECURE TO ROOF TRUSS, TERMINATE OVER HOPPER
15. DEWATERING UNIT 2, SEE SPECIFICATIONS
16. 6" PINCH VALVE, FLG
17. 6" SWING CHKV, FLG
18. CONC PIPE SUPPORT, SEE DET 2, SHT M-4
19. ADJ PIPE SUPPORT, SEE DET 3, SHT M-4
20. 6" DECANT WATER TO SETTLING CHAMBER 1 PER PLAN
21. 4" DI SPL, FLGxPE, LENGTH AS REQ'D
22. 4" DI 90° BEND, FLG
23. 4" DISMANTLING JT
24. 4" DI SPL, PExPE, LENGTH AS REQ'D
25. 6" DI TEE FLG W/ 1" THRD TAP, 1" BV, 1"x¾" RDCR BUSHING, ¾" HOSE CONNECTION, INSTALL BRANCH OF TEE HORIZ AND UPSTREAM FACE OF PINCH VALVE DIRECTLY TO BRANCH
26. 6" DI 90° BEND, FLG, CONNECT TO DOWNSTREAM FACE OF 6" PINCH VALVE, SEE NOTE 25
27. CONC SLAB PENETRATIONS, SEE STRUCT DWGS, SEAL W/ LINK SEALS
28. ADJ PIPE SUPPORT, SEE DET 4, SHT M-4
29. 6" DI TEE W/ 2" THRD TAP, FLG, SEE DET 2, SHT M-5 FOR 2" CONN
30. 6" DI 90° BEND, MJ RESTR, ROTATE PER PLAN
31. 4" DI 90° BEND, MJ RESTR
32. 4" RFCA

NO.	DATE	BY	REVISION

NOTICE
0 ½ 1
IF THIS BAR DOES NOT MEASURE 1" THEN DRAWING IS NOT TO SCALE

AS DESIGNED
BAW DRAWN
MLH CHECKED

REGISTERED PROFESSIONAL ENGINEER 19195 OREGON JULY 15, 1987 MATTHEW L. HICKEY
RENEWS 6-30-17

MSA Murray, Smith & Associates, Inc. Engineers/Planners
888 S.W. 5th Ave, Suite 1170 Portland, Oregon 97204
PHONE 503-225-9010 FAX 866-274-9807

CITY OF ALBANY, OREGON
RAW WATER PUMP STATION SAND REMOVAL IMPROVEMENTS

DEWATERING UNIT 2 SECTION VIEWS

PROJECT NO.: 12-1397.223 | SCALE: AS SHOWN | DATE: OCTOBER 2016

SHEET M-3
20 of 28

G:\PDX_Projects\12\1397\CAD\Sheets\12-1397-OR-M.dwg M-3 10/28/2016 11:39 AM RLF 20.0s (LMS Tech)

NOTES:

1. SECURE UNISTRUT TO WALL WITH CONCRETE WEDGE ANCHORS, RED HEAD TRU BOLT OR APPROVED EQUAL.

2. CONTRACTOR TO PROVIDE TWO (2) ¾"x50' REINFORCED RUBBER HOSE, INDUSTRIAL DUTY.

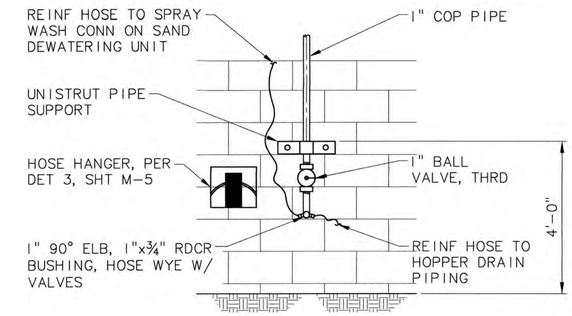

WASH WATER HOSE CONNECTION DETAIL (1/–)

SCALE: NTS

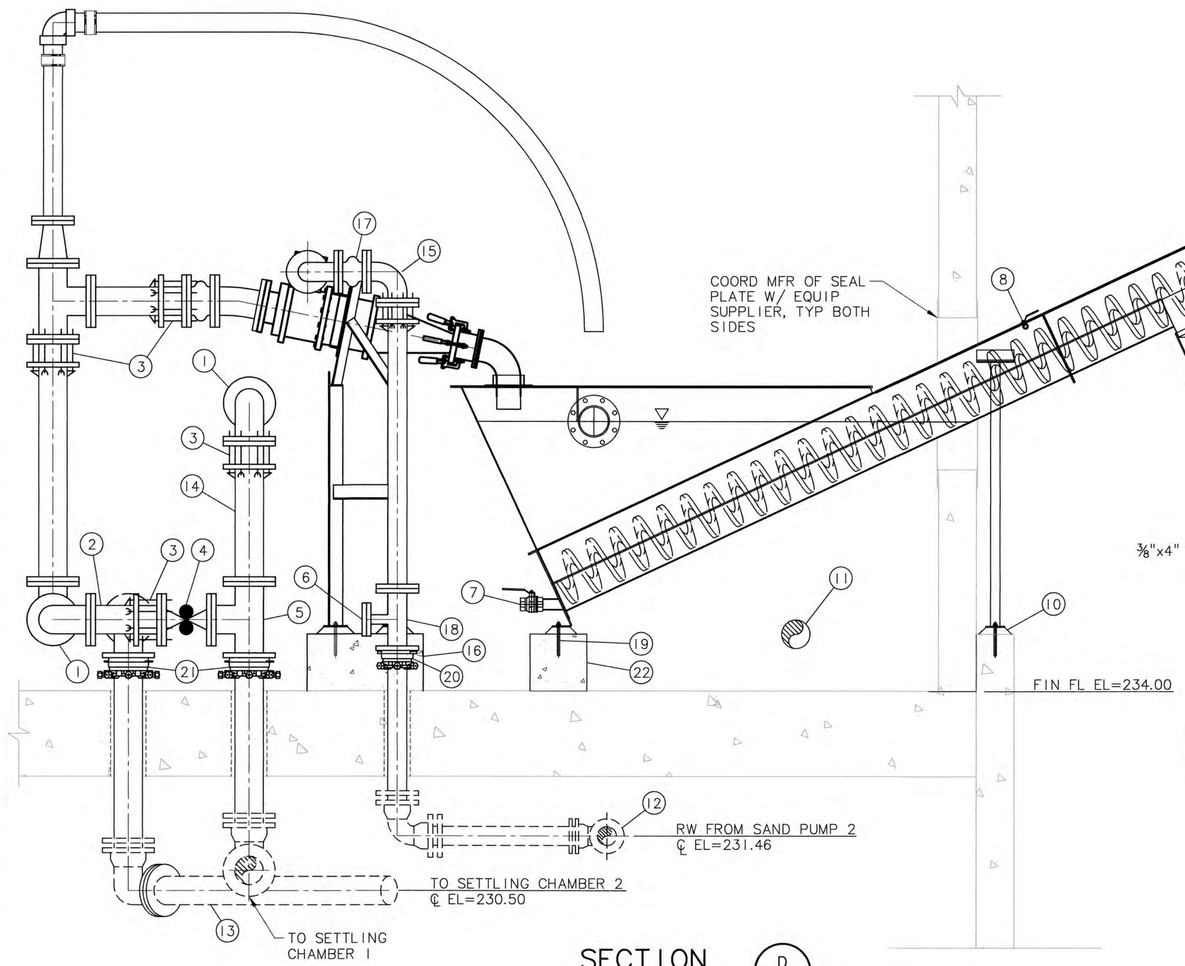

SECTION (D/M-1)

SCALE: 3/4"=1'-0"

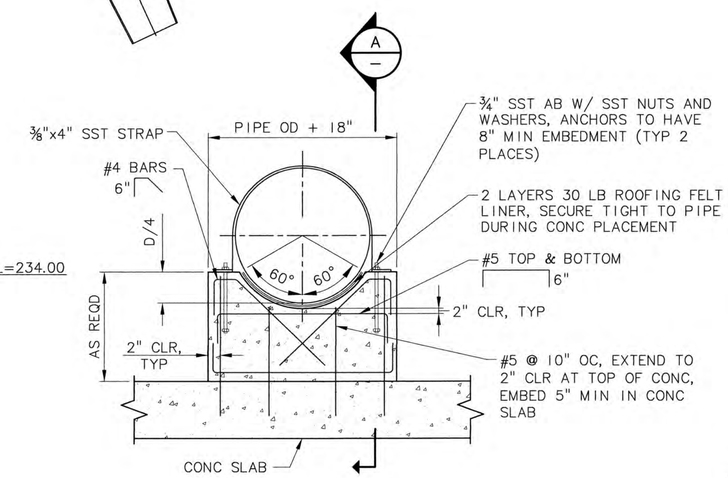

ELEVATION

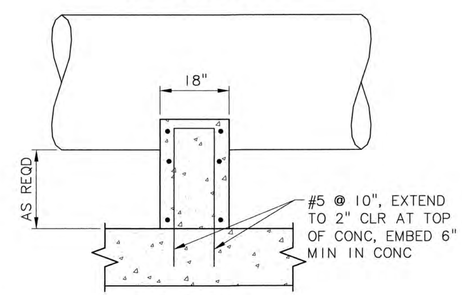

SECTION A

CONCRETE SUPPORT DETAIL (2/–)

SCALE: NTS

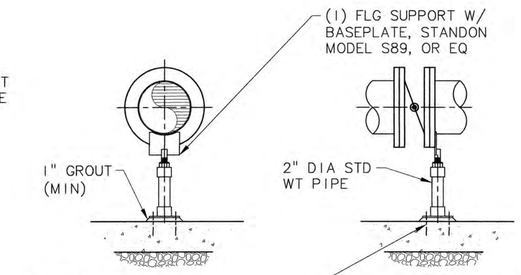

NOTE:

1. ALL MATERIALS ASTM A36 HOT DIPPED GALVANIZED CARBON STRUCTURAL STEEL.

S89 PIPE SUPPORT AT FLANGE (3/–)

SCALE: NTS

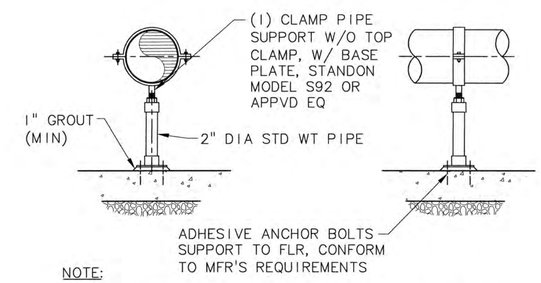

NOTE:

1. ALL MATERIALS ASTM A36 HOT DIPPED GALVANIZED CARBON STRUCTURAL STEEL.

S92 PIPE SUPPORT DETAIL (4/–)

SCALE: NTS

KEY NOTES

1. 6" DI 90° BEND, FLG
2. 6" DI SPL, FLG X PE, LENGTH AS REQ'D
3. 6" RFCA
4. 6" PINCH VALVE, FLG
5. 6" DI TEE, FLG
6. RW SAMPLE CONNECTION, SEE DET 1, SHT M-5
7. HOPPER DRAIN PIPING, SEE DET 2, SHT M-5
8. 1/2" SPRAY WASH CONNECTION W/ ¾"x½" RDCR, CONNECT REINFORCED RUBBER HOSE, SEE DET 1, THIS SHT
9. DISCHARGE CHUTE, FURNISHED WITH DEWATERING UNIT
10. TROUGH SUPPORT LEGS, FURNISHED WITH DEWATERING UNIT
11. 6" DI DECANT WATER DISCHARGE TO RIVER, CONNECT TO EXIST PER PLAN, LENGTH AS REQ'D
12. 4" RW TO DEWATERING UNIT 2, FROM SAND PUMP ROOM PER PLAN
13. 6" DECANT WATER TO SETTLING CHAMBER 2 PER PLAN
14. 6" DI SPL, FLGxPE, LENGTH AS REQ'D
15. 4" DI 90° BEND, FLG
16. CONC SUPPORT PAD, SEE DET 2, THIS SHT, APPROX 2'-10"x2'-0"x1'-0"
17. 4" RESTR EXP JT W/ TWO (2) CONTROL UNITS
18. 4"x2" TEE, FLG
19. ANCHORS PER MANUFACTURER'S REQ'S
20. 4" 2100 SERIES MEGALUG
21. 6" 2100 SERIES MEGALUG
22. CONC SUPPORT PAD, SEE DET 2, THIS SHT, APPROX 1'-6"x1'-0"x1'-0"

NO.	DATE	BY	REVISION

NOTICE: 0 ½ 1 — IF THIS BAR DOES NOT MEASURE 1" THEN DRAWING IS NOT TO SCALE

AS DESIGNED | BAW DRAWN | MLH CHECKED

REGISTERED PROFESSIONAL ENGINEER 19195 OREGON JULY 15, 1997 MATTHEW L. HICKEY — RENEWS 6-30-17

MSA Murray, Smith & Associates, Inc. Engineers/Planners
888 S.W. 5th Ave, Suite 1170 Portland, Oregon 97204 PHONE 503-225-9010 FAX 866-274-9807

CITY OF ALBANY, OREGON
RAW WATER PUMP STATION SAND REMOVAL IMPROVEMENTS

DEWATERING UNIT 2 SECTION VIEW & DETAILS

PROJECT NO.: 12-1397.223 | SCALE: AS SHOWN | DATE: OCTOBER 2016

SHEET M-4

G:\PDX_Projects\12\1397\CAD\Sheets\12-1397-OR-M.dwg M-4 10/28/2016 11:39 AM RLF 20.0s (LMS Tech)

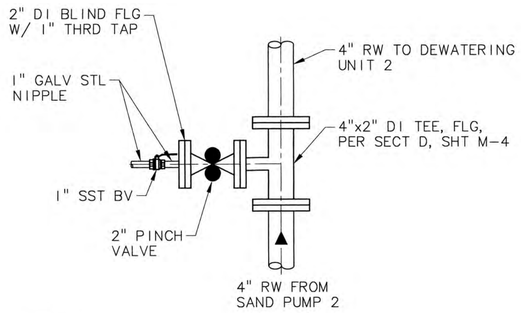

NOTE:

1. BALL VALVES SHALL BE LEAD FREE.

RW SAMPLE CONNECTION (1 / M-4)

SCALE: NTS

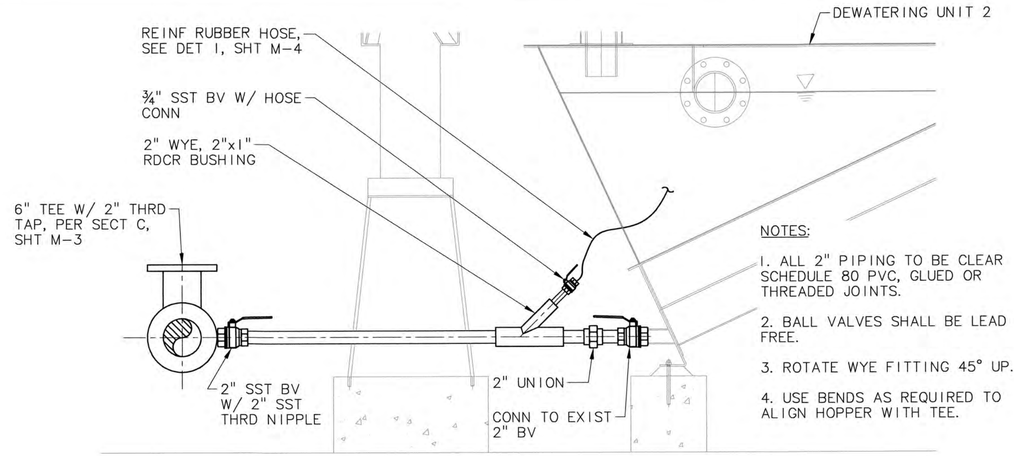

NOTES:

1. ALL 2" PIPING TO BE CLEAR SCHEDULE 80 PVC, GLUED OR THREADED JOINTS.
2. BALL VALVES SHALL BE LEAD FREE.
3. ROTATE WYE FITTING 45° UP.
4. USE BENDS AS REQUIRED TO ALIGN HOPPER WITH TEE.

ELEVATION

HOPPER DRAIN PIPING (2 / –)

SCALE: NTS

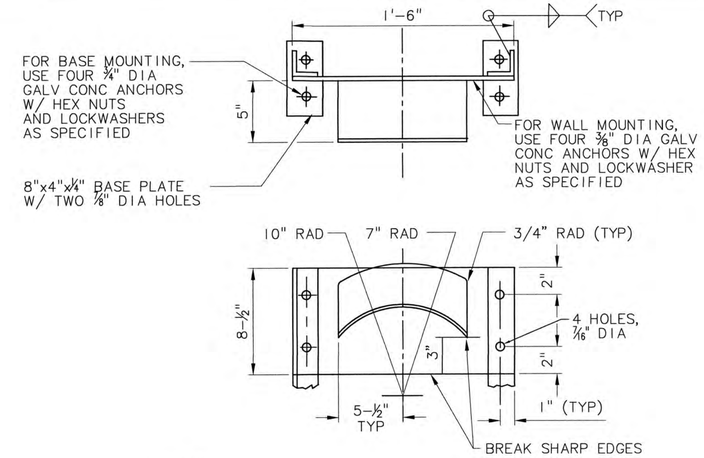

NOTE:

1. WHERE HOSE RACK IS FREE-STANDING, PROVIDE TWO STEEL ANGLES 2x2x¼ W/BASE PLATES (OMIT BASE PLATES WHERE ANGLES CAN BE SET IN CONCRETE). ALL WELDED CONSTRUCTION. 8 GAUGE STEEL SHEET GALVANIZED AFTER FABRICATION.

HOSE HANGER DETAIL (3 / M-4)

SCALE: NTS

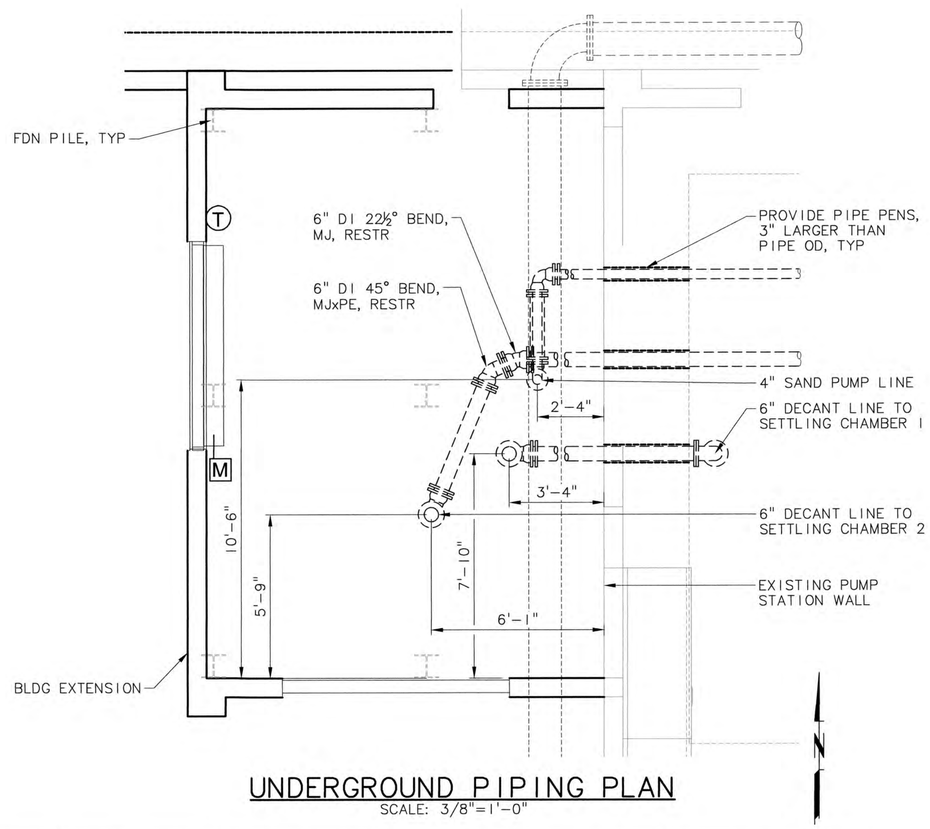

UNDERGROUND PIPING PLAN

SCALE: 3/8"=1'-0"

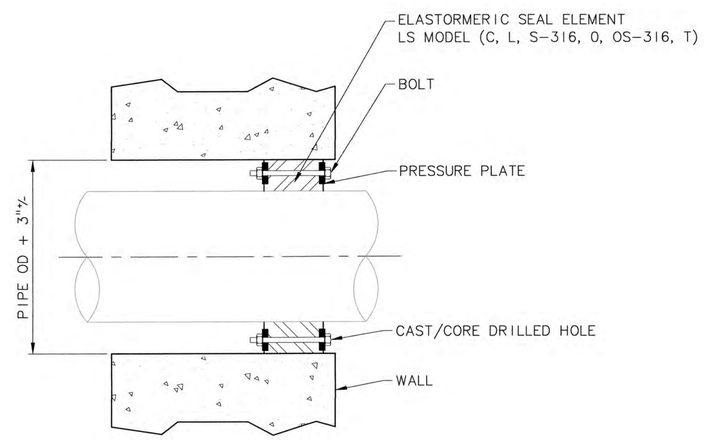

WALL PIPE PENETRATION (4 / –)

SCALE: NTS

NO.	DATE	BY	REVISION

NOTICE: 0 ½ 1 — IF THIS BAR DOES NOT MEASURE 1" THEN DRAWING IS NOT TO SCALE

AS DESIGNED | BAW DRAWN | MLH CHECKED

REGISTERED PROFESSIONAL ENGINEER 19195 OREGON JULY 15, 1997 MATTHEW L. HICKEY — RENEWS 6-30-17

MSA Murray, Smith & Associates, Inc. Engineers/Planners
888 S.W. 5th Ave, Suite 1170 Portland, Oregon 97204 PHONE 503-225-9010 FAX 866-274-9807

CITY OF ALBANY, OREGON
RAW WATER PUMP STATION SAND REMOVAL IMPROVEMENTS

DEWATERING UNIT 2 DETAILS

PROJECT NO.: 12-1397.223 | SCALE: AS SHOWN | DATE: OCTOBER 2016

SHEET M-5

G:\PDX_Projects\12\1397\CAD\Sheets\12-1397-OR-M.dwg M-5 10/28/2016 11:39 AM RLF 20.0s (LMS Tech)

ELECTRICAL LEGEND

- WALL MOUNTED LUMINAIRE
- SURFACE MOUNTED FLUORESCENT LUMINAIRE
- $ WALL SWITCH
- $K KEY OPERATED SWITCH
- $T TIMER SWITCH
- OUTLET – DATA
- SECURITY CAMERA
- GFI 1 WP — DUPLEX RECEPTACLE–NORMAL, GROUND FAULT INTERRUPTING CIRCUIT NUMBER SHOWN
- CONNECTION TO SPECIAL EQUIPMENT OR OUTLET AS SHOWN
- 5 — MOTOR OUTLET, HORSEPOWER INDICATED.
- 30 30 — DISCONNECT SWITCH, RATING SHOWN
- ELECTRICAL EQUIPMENT
- J — JUNCTION BOX
- P4 — HOME RUN, ELECTRICAL PANEL DESTINATION SHOWN.
- CONDUIT CONCEALED UNDERFLOOR OR UNDERGROUND.*
- CONDUIT CONCEALED IN WALL OR ABOVE CEILING IN FINISHED AREAS, EXPOSED IN PROCESS AND EQUIPMENT AREAS.*

NOTES:

1. RUNS MARKED WITH CROSS–HATCHES INDICATE NUMBER OF NO. 12 WIRE. LARGER GAUGES ARE SHOWN OR NOTED ELSEWHERE. LONG CROSS HATCH INDICATES NEUTRAL, REVERSE SLANT INDICATES GREEN GROUND WIRE.
2. FOR UNMARKED CONDUIT RUNS, CONTRACTOR SHALL INSTALL REQUIRED NUMBER OF WIRES FOR POWER AND/OR CONTROL OF ELEMENTS IN CIRCUIT(S) SHOWN. SIZE OF WIRE SHALL BE NO. 12, UNLESS OTHERWISE NOTED OR REQUIRED BY CODE.
3. SIZE CONDUIT ACCORDING TO SPECIFICATIONS AND APPLICABLE CODE.
4. ALL LIGHTING SWITCH RUN CONDUIT SHALL BE CALCULATED FOR A FUTURE NEUTRAL CONDUCTOR.

- ETHERNET DATA CONNECTION (DUPLEX RJ45)
- I — DRAWING NOTE
- 1 — ELECTRICAL CIRCUIT IDENTIFICATION
- 1 2 3 4 — MULTIPLE ELECTRICAL CIRCUITS, SEPARATE CONDUITS
- 1"C — 1 2 3 4 — MULTIPLE ELECTRICAL CIRCUITS, COMMON CONDUIT (SIZE SHOWN)

- THERMAL MAGNETIC CIRCUIT BREAKER
- 15AC — MAGNETIC ONLY CIRCUIT BREAKER (MOTOR CIRCUITS ONLY) CONTINUOUS CURRENT RATING AND TRIP SETTINGS SHOWN
- 400AT — FUSE
- CURRENT TRANSFORMER
- TRANSFORMER
- GROUND CONNECTION PER NEC ARTICLE 250
- 3% — LINE OR LOAD REACTOR. % IMPEDANCE AS INDICATED
- W — PUSH–TO–TEST PILOT LIGHT, COLOR INDICATED
- CR CR — CONTROL RELAY OR CONTACTOR, DIODE SHOWN AT RIGHT
- CR CR — RELAY CONTACTS
- HAND OFF AUTO — SELECTOR SWITCH, 3 POSITION SHOWN
- PUSHBUTTON, OR SELECTOR SWITCH CONTACTS
- TEMPERATURE SWITCH OR T–STAT CONTACTS
- LIMIT SWITCH CONTACTS
- LEVEL SWITCH CONTACTS
- ETM — ELAPSED TIME METER
- POTENTIOMETER
- MOTION SENSOR OR PHOTOCELL
- COMBINATION MOTOR STARTER, NEMA SIZE AS INDICATED
- PC — PHOTOCELL
- S — SMOKE DETECTOR
- D — SECURITY DOOR SWITCH
- CS — CONTROL STATION

ABBREVIATIONS

A	AMPERES
AC	ALTERNATING CURRENT
AIC	AMPERE INTERRUPTING CAPACITY
AFF	ABOVE FINISHED FLOOR
A.G.	ABOVE GRADE
ATS	AUTOMATIC TRANSFER SWITCH
BBTP	BLOWER BUILDING TELEMETRY PANEL
B.G.	BELOW GRADE
BLDG	BUILDING
BLU	BLUE
CAD	CAPTIVE AIR DEVICE
CB	CIRCUIT BREAKER
CGD	COMBUSTIBLE GAS DETECTOR
CHH	CONTROL HANDHOLE
CKT	CIRCUIT
CO	CONDUIT ONLY
CPT	CONTROL POWER TRANSFORMER
CR	CONTROL RELAY
CT	CURRENT TRANSFORMER
CU	COPPER
DC	DIRECT CURRENT
E	EMERGENCY
EF	EXHAUST FAN
EH	ELECTRIC HEATER
ETM	ELAPSED TIME METER
EXT	EXTERIOR
F, FU	FUSE
FLUOR	FLUORESCENT
FM	FLOW METER
FVNR	FULL VOLTAGE NON–REVERSING
G, GND	GROUND
GFI	GROUND FAULT INTERRUPTER
GRS	GALVANIZED RIGID STEEL CONDUIT
HH	HANDHOLE
HID	HIGH INTENSITY DISCHARGE
HOA	HAND–OFF–AUTOMATIC
HP	HORSEPOWER
IC	INTERRUPTING CAPACITY, ISOLATION CONTACTOR
INT	INTERIOR
ISB	INTRINSICALLY SAFE BARRIER
J, JB	JUNCTION BOX
KAIC	THOUSAND AMPERE INTERRUPTING CAPACITY
KVA	KILO VOLT–AMP
KW	KILOWATT
LC	LIGHTING CONTACTOR
LCP	LIGHTING CONTROL PANEL
LB	LOAD BANK
LEL	LOWER EXPLOSIVE LIMIT
LOS	LOCK–OUT–STOP
LP	LIGHTING PANEL
MB	METER BASE
MCC	MOTOR CONTROL CENTER
MCP	MOTOR CIRCUIT PROTECTOR
MD	MAIN DISCONNECT
MDP	MAIN DISTRIBUTION PANEL
MFR	MANUFACTURER
MIN	MINIMUM
MISC	MISCELLANEOUS
MTS	MANUAL TRANSFER SWITCH
N, NEUT	NEUTRAL
NEC	NATIONAL ELECTRIC CODE
NO	NUMBER
OC	OPERATION COUNTER
OL	OVERLOAD RELAY
ORN	ORANGE
PC	PHOTOCELL
PDP	PUMP DISCONNECT PANEL
PFR	PHASE FAIL RELAY
PH, ø	PHASE
PHH	POWER HANDHOLE
PLC	PROGRAMMABLE LOGIC CONTROLLER
PM	POWER MONITOR
PNL	PANEL
PVC	POLYVINYL CHLORIDE
PVC–RGS	PVC COATED RGS
RCPT	RECEPTACLE
RGS	RIGID GALVANIZED STEEL
RTM	RUN TIME METER
SF	SUPPLY FAN
SIM	SIMILAR
SPD	SURGE PROTECTOR DEVICE
SS	STAINLESS STEEL
SSPC	SMALL STATION PUMP CONTROLLER
SSRV	SOLID STATE REDUCED VOLTAGE STARTER
TB	TERMINAL BLOCK
TDR	TIME DELAY RELAY
TJB	TERMINAL JUNCTION BOX
TSP	TWISTED SHIELDED PAIR
TST	TWISTED SHIELDED TRIAD
TTB	TELEPHONE TERMINAL BOARD
TVSS	TRANSIENT VOLTAGE SURGE SUPPRESSOR
TYP	TYPICAL
UG	UNDERGROUND
UH	UNIT HEATER
UPS	UNINTERRUPTIBLE POWER SUPPLY
USLC	ULTRASONIC LEVEL CONTROLLER
V	VOLT
VA	VOLT–AMP
VFD	VARIABLE FREQUENCY DRIVE
VP	VAPOR PROOF
W	WATT, WIRE
WH	WATER HEATER
WP	WEATHERPROOF
XDCR	TRANSDUCER
XFMR	TRANSFORMER
XMTR	TRANSMITTER

NOTE: NOT ALL ABBREVIATIONS OR SYMBOLS USED.

R&W ENGINEERING, INC. "Engineering Integrated Solutions"
9615 S.W. Allen Boulevard
Suite 107
Beaverton, Oregon 97005
Phone: (503) 726-3331
Fax: (503) 726-3326
E-mail: rweng@rweng.com
Project No.: 483.097.001 Contact: SAM RUSSUM

NO.	DATE	BY	REVISION

NOTICE
0 ½ 1
IF THIS BAR DOES NOT MEASURE 1" THEN DRAWING IS NOT TO SCALE

SMR DESIGNED
CAD DRAWN
SMR CHECKED

REGISTERED PROFESSIONAL ENGINEER 75680PE OREGON SEPTEMBER 8, 2009 SAMUEL M. RUSSUM
EXPIRES 12/31/16
Oct 24 2016 2:53 PM

MSA Murray, Smith & Associates, Inc. Engineers/Planners
121 S.W. Salmon, Suite 900 Portland, Oregon 97204
PHONE 503-225-9010 FAX 503-225-9022

CITY OF Albany

CITY OF ALBANY, OREGON RAW WATER PUMP STATION SAND REMOVAL IMPROVEMENTS

ELECTRICAL COVER SHEET

PROJECT NO.: 12-1397.222 | SCALE: AS SHOWN | DATE: OCTOBER 2016

SHEET E-1

W:\WF\483_Murray Smith Assoc\097_Water Intake Sand Removal Improvements\001_Design\DWG\E-01.dwg Layout1 10/24/2016 2:36 PM DAVID 19.1s (LMS Tech)

NOTES THIS SHEET

1. RWE-DP01 POWER FED FROM RWP-ATS01. SEE EXISTING BUILDING RECORD DRAWINGS FOR ADDITIONAL INFORMATION.
2. EXISTING "SPARE" BREAKER CURRENTLY WIRED TO UNUSED SPARE 30A DISCONNECT SWITCH ON INTERIOR WEST WALL OF BUILDING NEAR EXISTING DEWATERING UNIT. BREAKERS IDENTIFIED IN PANEL SCHEDULE AS POLES 32, 34, 36, "480V DISCONNECT".
3. EXISTING SPARE DISCONNECT. SEE SHEET E-3 FOR LOCATION MODIFICATIONS.

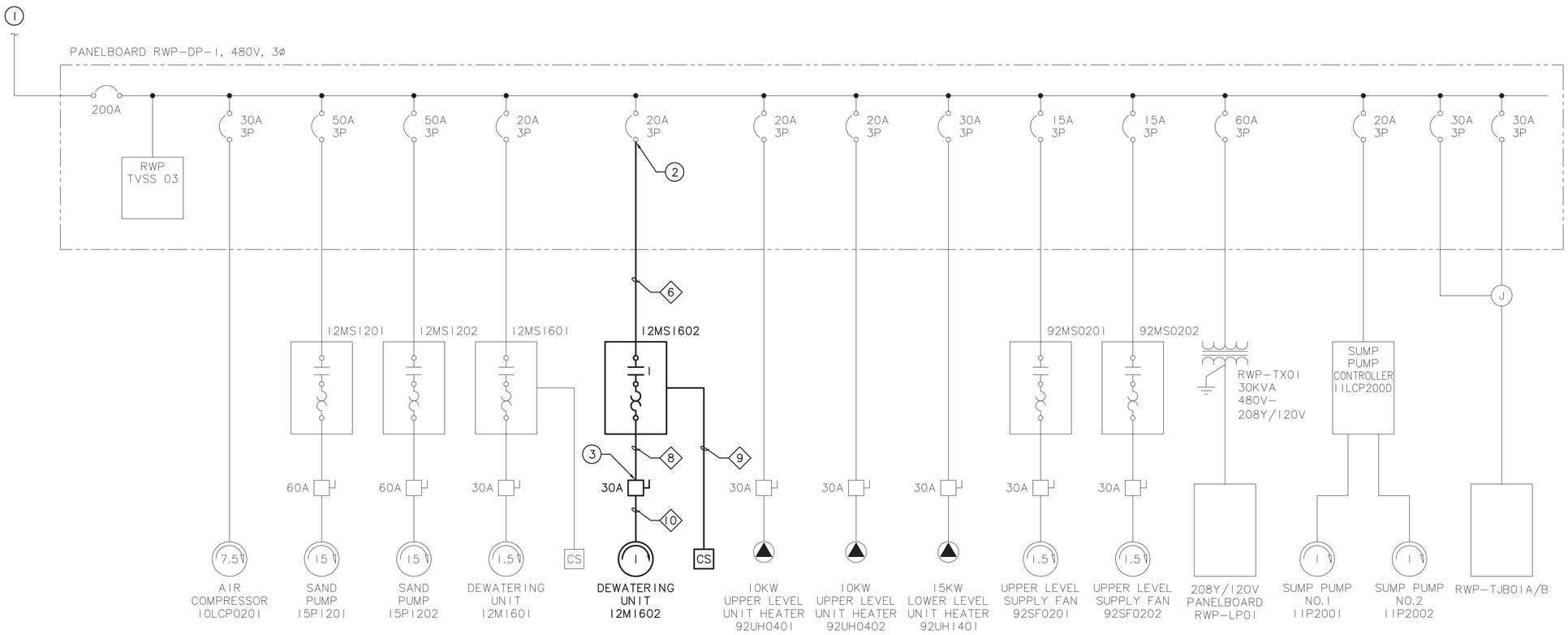

1 / E-2 RWP-DP01 ONE-LINE DIAGRAM

NOT TO SCALE

R&W ENGINEERING, INC. "Engineering Integrated Solutions"
9615 S.W. Allen Boulevard
Suite 107
Beaverton, Oregon 97005
Phone: (503) 726-3331
Fax: (503) 726-3326
E-mail: nweng@rweng.com
Project No.: 483.097.001 Contact: SAM RUSSUM

NO.	DATE	BY	REVISION

NOTICE
0 ½ 1
IF THIS BAR DOES NOT MEASURE 1" THEN DRAWING IS NOT TO SCALE

SMR DESIGNED
CAD DRAWN
SMR CHECKED

REGISTERED PROFESSIONAL ENGINEER 75680PE OREGON SEPTEMBER 8, 2010 SAMUEL M. RUSSUM
EXPIRES 12/31/16
Oct 24 2016 2:54 PM

MSA Murray, Smith & Associates, Inc. Engineers/Planners
121 S.W. Salmon, Suite 900 Portland, Oregon 97204
PHONE 503-225-9010 FAX 503-225-9022

CITY OF ALBANY, OREGON
RAW WATER PUMP STATION SAND REMOVAL IMPROVEMENTS

ELECTRICAL ONE-LINE DIAGRAM

PROJECT NO.: 12-1397.222 | SCALE: AS SHOWN | DATE: OCTOBER 2016

SHEET E-2

W:\WF\483_Murray Smith Assoc\097_Water Intake Sand Removal Improvements\001_Design\DWG\E-02.dwg Layout1 10/21/2016 5:58 PM DAVID 19.1s (LMS Tech)

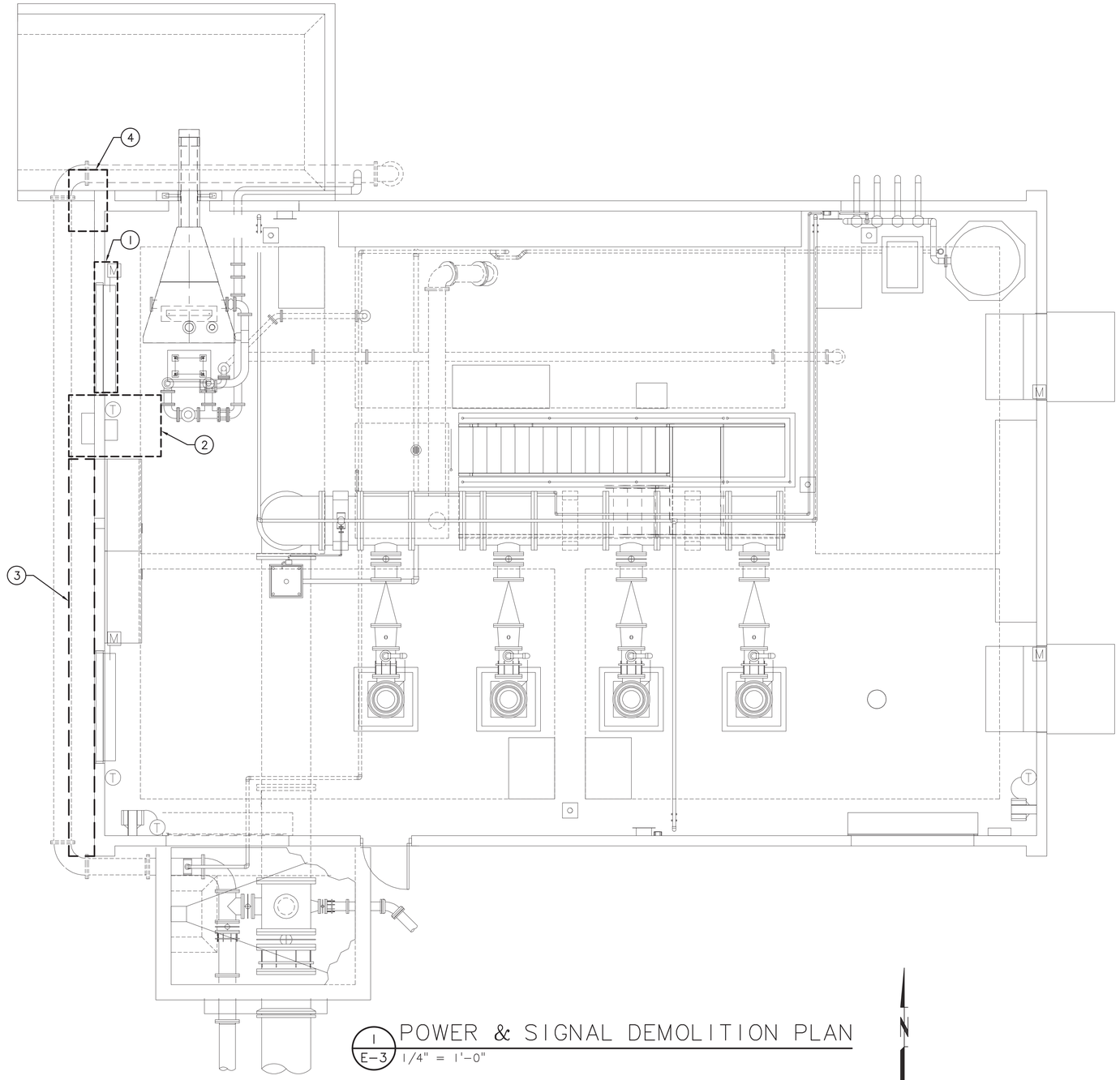

1 E-3 POWER & SIGNAL DEMOLITION PLAN

1/4" = 1'-0"

NOTES THIS SHEET

1. EXISTING THERMOSTAT, LOUVER, AND MOTORIZED DAMPERS SHALL BE REMOVED FROM EXISTING WEST WALL AND RELOCATED TO BUILDING ADDITION WEST WALL.
2. EXISTING FIBER PULL BOXES (INTERIOR AND EXTERIOR), SPARE 30A DISCONNECT, AND HORN/STROBE LOCATED IN THIS AREA SHALL BE RELOCATED AS INDICATED ON SHEET E-4. DISCONNECT AND PULL CONDUCTORS OF EXISTING CIRCUITS TO INDICATED EQUIPMENT. CUT CONDUITS FOR THE EXISTING EQUIPMENT FLUSH WITH FLOOR AND SEAL/CAP.
3. SAW CUT EXISTING ASPHALT AND EXCAVATE AS REQUIRED TO LOCATE AND RE-ROUTE EXISTING FIBER TO NEW LOCATION SHOWN ON SHEET E-4. CONTRACTOR SHALL COORDINATE ANY NETWORK DOWN TIME NECESSARY AS A RESULT OF RELOCATION OF EXISTING FIBER FEED WITH CITY STAFF PRIOR TO DISRUPTION. ALL NETWORK DOWN TIME SHALL BE COORDINATED SO AS TO MINIMIZE THE LENGTH OF TIME NETWORK COMMUNICATIONS ARE DOWN. NEAREST KNOWN PULL VAULT FOR FIBER CIRCUIT IS LOCATED AT THE TOP OF THE HILL APPROXIMATE 1,000 FT. FROM THE RAW WATER INTAKE BUILDING.
4. EXISTING CCTV CAMERA SHALL BE REMOVED AND RELOCATED AS SHOWN ON E-4.

R&W ENGINEERING, INC.
"Engineering Integrated Solutions"
9615 S.W. Allen Boulevard
Suite 107
Beaverton, Oregon 97005
Phone: (503) 726-3331
Fax: (503) 726-3326
E-mail: rweng@rweng.com
Project No.: 483.097.001 Contact: SAM RUSSUM

NO.	DATE	BY	REVISION

NOTICE
0 ½ 1
IF THIS BAR DOES NOT MEASURE 1" THEN DRAWING IS NOT TO SCALE

SMR DESIGNED
CAD DRAWN
SMR CHECKED

REGISTERED PROFESSIONAL ENGINEER 75680PE OREGON SEPTEMBER 8, 2010 SAMUEL M. RUSSUM EXPIRES 12/31/16
Oct 24 2016 2:54 PM

MSA Murray, Smith & Associates, Inc. Engineers/Planners
121 S.W. Salmon, Suite 900 Portland, Oregon 97204
PHONE 503-225-9010 FAX 503-225-9022

CITY OF ALBANY, OREGON
RAW WATER PUMP STATION SAND REMOVAL IMPROVEMENTS

POWER AND SIGNAL DEMOLITION PLAN

PROJECT NO.: 12-1397.222 | SCALE: AS SHOWN | DATE: OCTOBER 2016

SHEET E-3

W:\WF\483_Murray Smith Assoc\097_Water Intake Sand Removal Improvements\001_Design\DWG\E-03.dwg Layout1 10/19/2016 10:00 AM DAVID 19.1s (LMS Tech)

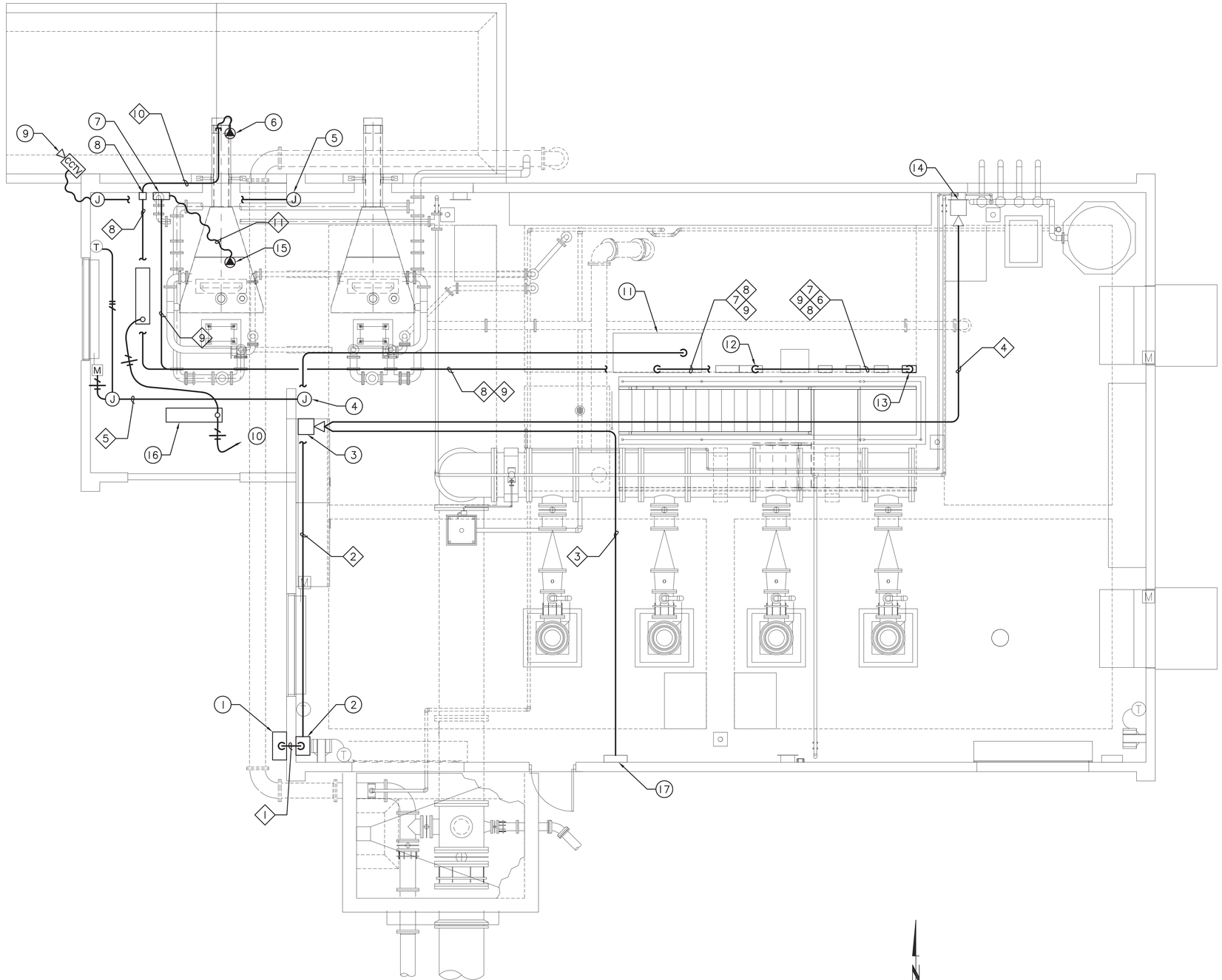

1 / E-4 POWER, SIGNAL & LIGHTING PLAN

1/4" = 1'-0"

NOTES THIS SHEET

1. RELOCATED EXISTING EXTERIOR FIBER PULL BOX. PROVIDE NEW 4" ELBOWS AND CONDUIT FOR RE-ROUTING OF EXISTING FIBER CIRCUIT AND SPARE 4" CONDUIT.
2. RELOCATED EXISTING INTERIOR FIBER PULL BOX. FIELD VERIFY SPECIFIC LOCATION TO ENSURE NO INSTALLATION CONFLICTS EXIST. COORDINATE ANY CONFLICTS WITH THE ENGINEER PRIOR TO CONTINUING INSTALLATION.
3. RELOCATED EXISTING FIRE ALARM HORN/STROBE. PROVIDE NEW CONDUIT AND CONDUCTOR AS SHOWN.
4. INTERCEPT EXISTING THERMOSTAT AND LOUVER/MOTOR DAMPER CIRCUIT. SPLICE AND EXTEND CIRCUIT CONDUCTORS AS SHOWN.
5. INTERCEPT EXISTING CCTV CIRCUIT. PROVIDE NEW CONDUIT AND CONDUCTOR AS SHOWN.
6. NEW DEWATERING UNIT MOTOR.
7. NEW DEWATERING UNIT REMOTE CONTROL PANEL. LABEL "DEWATERING UNIT 2 I2CS1602".
8. EXISTING RELOCATED 30A DISCONNECT.
9. RELOCATED EXISTING CCTV CAMERA.
10. TIE IN NEW LIGHTS TO EXISTING INTERIOR BUILDING LIGHTING CIRCUIT AT NEAREST EXISTING LUMINAIRE. FIELD COORDINATE LOCATION.
11. EXISTING BUILDING CONTROL PANEL 'RWP-CP01'.
12. EXISTING 480V DISTRIBUTION PANELBOARD 'RWP-DP01'.
13. NEW MOTOR STARTER CONTROL PANEL. LABEL MOTOR STARTER "I2MS1602".
14. EXISTING FIRE ALARM HORN/STROBE. PROVIDE NEW SERIES CIRCUITING AS SHOWN.
15. NEW DEWATERING UNIT CONTROL FLOAT. FIELD VERIFY SPECIFIC LOCATION.
16. PROVIDE AND INSTALL NEW LUMINARES IN BUILDING ADDITION AS SHOWN, TYPICAL OF 2. MOUNT LUMINAIRES TO MATCH EXISTING LUMINAIRE MOUNTING ABOVE FINISHED FLOOR. LUMINAIRES SHALL BE PENDANT MOUNT POLYESTER FIBERGLASS HOUSED WITH HIGH IMPACT ACRYLIC DIFFUSER, 10% THD INSTANT START BALLAST, AND WET LOCATION LISTED. PROVIDE LITHONIA #DMW-2-MVOLT-GEB10IS-STSL, OR APPROVED EQUIVALENT. PROVIDE LED COMPATIBLE LAMPS WITH LOW TEMPERATURE OPERATION, 160-DEGREE BEAM ANGLE, 3500K COLOR TEMPERATURE, AND 5-YEAR LIMITED WARRANTY. PROVIDE PHILIPS INSTANTFIT LED T8 #12T8/48-3500-1F-10/1-TAA, OR APPROVED EQUIVALENT.
17. EXISTING FIRE ALARM CONTROL PANEL.

R&W ENGINEERING, INC. "Engineering Integrated Solutions"
9615 S.W. Allen Boulevard
Suite 107
Beaverton, Oregon 97005
Phone: (503) 726-3331
Fax: (503) 726-3326
E-mail: rweng@rweng.com
Project No.: 483.097.001 Contact: SAM RUSSUM

NO.	DATE	BY	REVISION

NOTICE
0 ½ 1
IF THIS BAR DOES NOT MEASURE 1" THEN DRAWING IS NOT TO SCALE

SMR DESIGNED
CAD DRAWN
SMR CHECKED

REGISTERED PROFESSIONAL ENGINEER 75680PE OREGON SEPTEMBER 8, 2009 SAMUEL M. RUSSUM
EXPIRES 12/31/16
Oct 24 2016 2:57 PM

MSA Murray, Smith & Associates, Inc. Engineers/Planners
121 S.W. Salmon, Suite 900 Portland, Oregon 97204
PHONE 503-225-9010 FAX 503-225-9022

CITY OF ALBANY, OREGON
RAW WATER PUMP STATION SAND REMOVAL IMPROVEMENTS

POWER, SIGNAL & LIGHTING PLAN

PROJECT NO.: 12-1397.222 | SCALE: AS SHOWN | DATE: OCTOBER 2016

SHEET E-4

W:\WF\483_Murray Smith Assoc\097_Water Intake Sand Removal Improvements\001_Design\DWG\E-04.dwg Layout1 10/21/2016 5:58 PM DAVID 19.1s (LMS Tech)

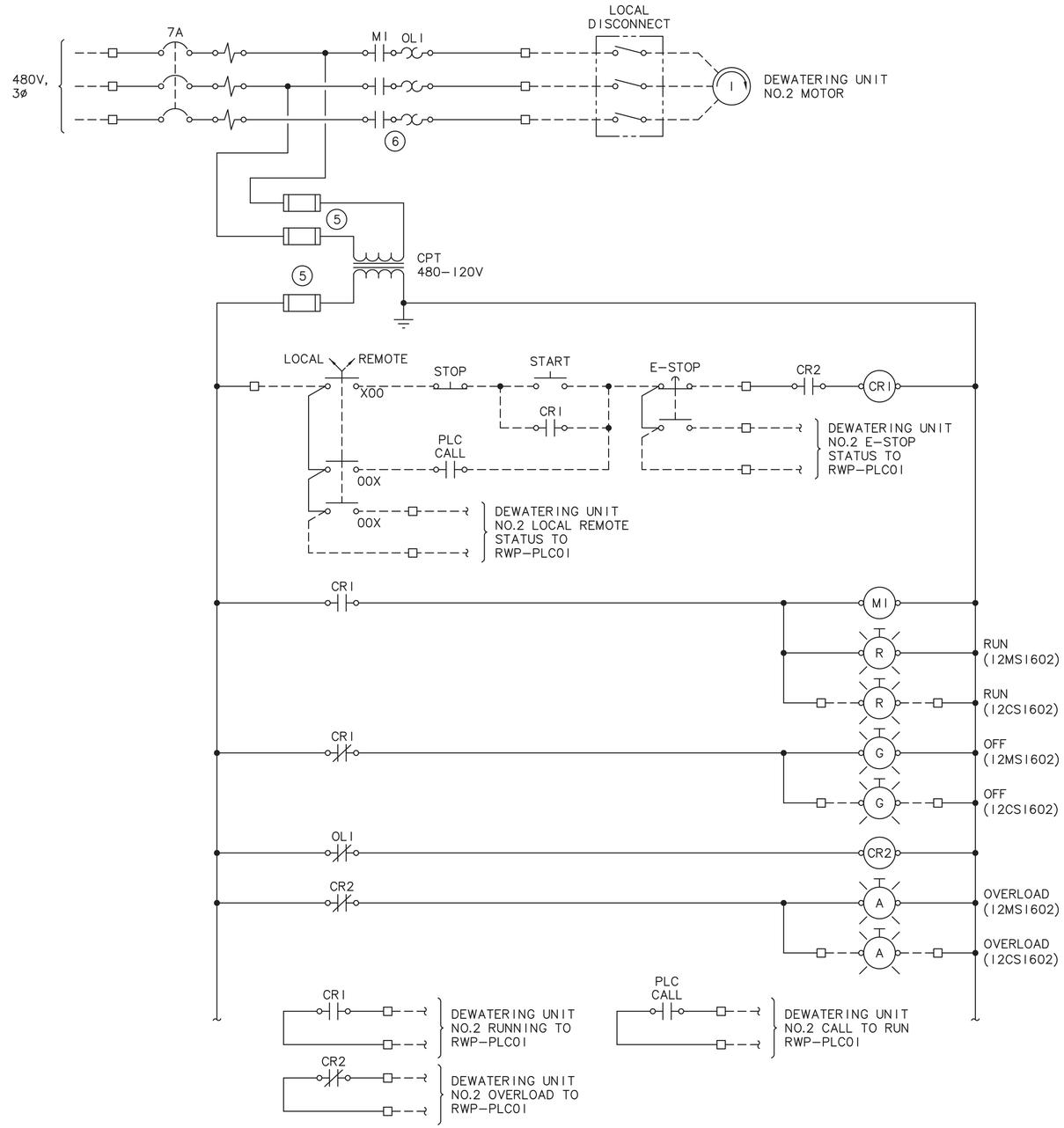

DE-WATERING UNIT NO. 2 MOTOR CONTROL SCHEMATIC

1 / E-5 NOT TO SCALE

NOTES THIS SHEET

1. FIELD COORDINATE RWP-PLC01 I/O TERMINATIONS WITH CITY OPERATIONS STAFF THAT WILL BE PROVIDING PLC PROGRAMMING.
2. RELOCATED EXISTING INTERIOR FIBER JUNCTION BOX.
3. RELOCATED EXISTING EXTERIOR FIBER JUNCTION BOX.
4. EXISTING FIBER FEED TO RWP BUILDING.
5. SIZE FUSES PER MANUFACTURER'S RECOMMENDATIONS.
6. PROVIDE NEMA SIZE 1 MOTOR STARTER, MINIMUM.

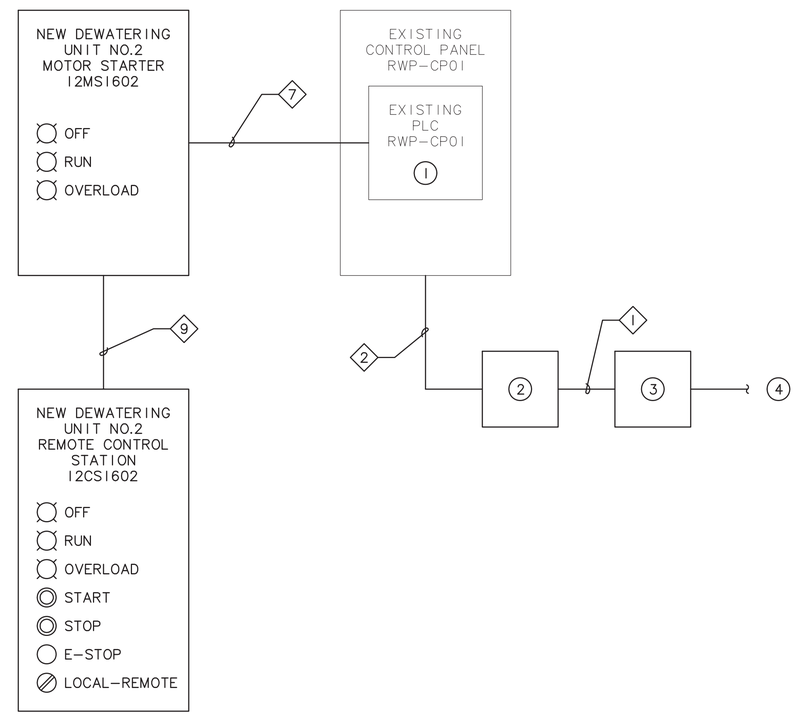

CONTROL SYSTEM INTERCONNECTION DIAGRAM

2 / E-5 NOT TO SCALE

R&W ENGINEERING, INC. "Engineering Integrated Solutions"
9615 S.W. Allen Boulevard
Suite 107
Beaverton, Oregon 97005
Phone: (503) 726-3331
Fax: (503) 726-3326
E-mail: rweng@rweng.com
Project No.: 483.097.001 Contact: SAM RUSSUM

NO.	DATE	BY	REVISION

NOTICE: 0 ½ 1 — IF THIS BAR DOES NOT MEASURE 1" THEN DRAWING IS NOT TO SCALE

SMR DESIGNED
CAD DRAWN
SMR CHECKED

REGISTERED PROFESSIONAL ENGINEER 75680PE OREGON SEPTEMBER 8, 2010 SAMUEL M. RUSSUM EXPIRES 12/31/16
Oct 24 2016 2:58 PM

MSA Murray, Smith & Associates, Inc. Engineers/Planners
121 S.W. Salmon, Suite 900 Portland, Oregon 97204
PHONE 503-225-9010 FAX 503-225-9022

CITY OF ALBANY, OREGON
RAW WATER PUMP STATION SAND REMOVAL IMPROVEMENTS

CONTROL SYSTEM INTERCONNECTION DIAGRAM

PROJECT NO.: 12-1397.222 | SCALE: AS SHOWN | DATE: OCTOBER 2016

SHEET E-5

W:\WF\483_Murray Smith Assoc\097_Water Intake Sand Removal Improvements\001_Design\DWG\E-05.dwg Layout1 10/21/2016 5:58 PM DAVID 19.1s (LMS Tech)

CITY OF ALBANY – RAW WATER PUMP STATION
ELECTRICAL CIRCUIT SCHEDULE

ALL CIRCUITS ARE IDENTIFIED ON THE PLANS WITH THE DIAMOND SYMBOL. CONDUCTOR SIZES ARE BASED ON COPPER CONDUCTORS. CONDUIT SIZES ARE SHOWN FOR CASES WHEN CIRCUIT CONDUCTORS ARE RUN WITHOUT OTHER CIRCUITS. MULTIPLE CIRCUITS RUN IN COMMON CONDUITS ARE SHOWN ON PLANS AND SUPERSEDE THE BASIC CONDUIT SIZE SHOWN.

RACEWAY SIZES ARE IN INCHES WITH QUANTITIES IN EXCESS OF (1) SHOWN IN ADJACENT PARENTHESIS. CONDUCTOR CONFIGURATIONS ARE CODED AS FOLLOWS: P– FOR POWER CONDUCTORS, G – FOR GROUND CONDUCTORS, N – FOR NEUTRAL CONDUCTORS, C – FOR CONTROL CONDUCTORS, AND SP – FOR SPARE CONDUCTORS.

CIRCUITS REVISED SINCE LAST ISSUE ARE INDICATED BY AN ASTERISK(*).

CIRCUIT NUMBER	FROM	TO	CONDUCTORS	RACEWAY	NOTES
1	RELOCATED EXISTING EXTERIOR FIBER PULL BOX	RELOCATED EXISTING INTERIOR FIBER PULL BOX	EXISTING FIBER CABLE	(2) 2"	RE–PULL EXISTING FIBER CABLE THROUGH CONDUITS AND PULL BOXES FOR RECONNECTION AT EXISTING RWP–CP01 PANEL.
2	RELOCATED EXISTING INTERIOR FIBER PULL BOX	RWP–CP01	EXISTING FIBER CABLE	2"	RE–PULL EXISTING FIBER CABLE THROUGH CONDUITS AND PULL BOXES FOR RECONNECTION AT EXISTING RWP–CP01 PANEL.
3	EXISTING FACP	RELOCATED EXISTING WEST WALL HORN/STROBE	(1) #16 TSP, C (1) #12 AWG, G	3/4"	FIELD VERIFY ALL CONDUCTORS REQUIRED.
4	RELOCATED EXISTING WEST WALL HORN/STROBE	EXISTING NORTH WALL HORN/STROBE	(1) #16 TSP, C (1) #12 AWG, G	3/4"	FIELD VERIFY ALL CONDUCTORS REQUIRED.
5	LOUVER/MOTOR DAMPER INTERCEPT J–BOX	LOUVER EQUIPMENT J–BOX	(2) #14 AWG, C (2) #12 AWG, P (1) #12 AWG, G	1"	FIELD VERIFY ALL CONDUCTORS REQUIRED.
6	EXISTING RWP–DP01	NEW MOTOR STARTER 12MS1602	(3) #12 AWG, P (1) #12 AWG, G	3/4"	
7	EXISTING RWP–CP01	NEW MOTOR STARTER 12MS1602	(10) #14 AWG, C (6) #14 AWG, SP (1) #12 AWG, G	1"	
8	NEW MOTOR STARTER 12MS1602	RELOCATED EXISTING 30A DISCONNECT	(3) #12 AWG, P (1) #12 AWG, G	3/4"	
9	NEW MOTOR STARTER 12MS1602	NEW REMOTE CONTROL PANEL, 12CS1602	(14) #14 AWG, C (6) #14 AWG, SP (1) #12 AWG, G	1.25"	SOME CONDUCTORS ARE SPARE. COORDINATE WITH MFR INSTALLATION REQUIREMENTS.
10	RELOCATED EXISTING 30A DISCONNECT	NEW DEWATERING UNIT MOTOR	(3) #12 AWG, P (1) #12 AWG, G	3/4"	
11	NEW REMOTE CONTROL PANEL, 12CS1602	NEW DEWATERING UNIT LEVEL CONTROL FLOAT	MFR. CABLE	---	ROUTE SIGNAL BACK TO PLC THROUGH MOTOR STARTER WITH OTHER CONTROL WIRING.

PANEL: RWP–DP01 BUS: 225 A VOLTAGE: 480V, 3PH, 3 WIRE

FEEDER: SEE POWER RISER MAIN BRKR: 200A MOUNTING: (SURFACE)

CKT NO.	CIRCUIT DESCRIPTION	CKT BREAKER POLES/AMPS	LOAD Type	Volt–Amps	PHASE	LOAD Volt–Amps	LOAD Type	CKT BREAKER POLES/AMPS	CIRCUIT DESCRIPTION	CKT NO.
1	AIR COMPRESSOR 10LCP0201	3–30		3000	A	830		3–20	92SF0201	2
3	–	–		3000	B	830		–	–	4
5	–	–		3000	C	830		–	–	6
7	SAND PUMP 12P1201	3–50		5800	A	830		3–20	92SF0202	8
9	–	–		5800	B	830		–	–	10
11	–	–		5800	C	830		–	–	12
13	SAND PUMP 12P1202	3–50		5800	A	3333		3–20	HEATER 92UH0401	14
15	–	–		5800	B	3333		–	–	16
17	–	–		5800	C	3333		–	–	18
19	DEWATERING UNIT NO.1	3–20		800	A	3333		3–20	HEATER 92UH0402	20
21	12M1601	–		800	B	3333		–	–	22
23	–	–		800	C	3333		–	–	24
25	SUMP PUMP 11LCP2000	3–20		1200	A	5000		3–30	HEATER 92UH1401	26
27	–	–		1200	B	5000		–	–	28
29	–	–		1200	C	5000		–	–	30
31	RWP–TJB01A	3–20		800	A	**1200**		3–20	**DEWATERING UNIT NO.2**	32
33	–	–		800	B	**1200**		–	**12M1602**	34
35	–	–		800	C	**1200**		–	**–**	36
37	RWP–TJB01B	3–20		800	A	6694		3–60	PANEL RWP–LP01	38
39	–	–		800	B	4088		–	–	40
41	–	–		800	C	3424		–	–	42

	CONNECTED LOAD		TOTAL LOAD	
LOAD PER PHASE (VA)	A=	39420	A=	43166
	B=	36814	B=	40560
	C=	36150	C=	39896
LOAD PER PHASE (AMPS)	A=	142.31	A=	155.83
	B=	132.90	B=	146.43
	C=	130.51	C=	144.03
TOTAL LOAD (KVA)		112.38		123.62
SPARE CAPACITY	10.00%	11.24	DATE	07–Jun–16

.....NOTES.....

1. CIRCUITS SHOWN IN BOLD ARE NEW.
2. EXISTING CIRCUIT LOADS ARE BASED ON AS–BUILT DOCUMENTATION.
3.
4.
5.

R&W ENGINEERING, INC.
"Engineering Integrated Solutions"
9615 S.W. Allen Boulevard
Suite 107
Beaverton, Oregon 97005
Phone: (503) 726-3331
Fax: (503) 726-3326
E-mail: rweng@rweng.com
Project No.: 483.097.001 Contact: SAM RUSSUM

NO.	DATE	BY	REVISION

NOTICE
0 ½ 1
IF THIS BAR DOES NOT MEASURE 1" THEN DRAWING IS NOT TO SCALE

SMR DESIGNED
CAD DRAWN
SMR CHECKED

REGISTERED PROFESSIONAL ENGINEER 75680PE OREGON SEPTEMBER 9, 2003 SAMUEL M. RUSSUM
EXPIRES 12/31/16
Oct 24 2016 3:00 PM

MSA Murray, Smith & Associates, Inc.
Engineers/Planners
121 S.W. Salmon, Suite 900
Portland, Oregon 97204
PHONE 503-225-9010
FAX 503-225-9022

CITY OF ALBANY, OREGON
RAW WATER PUMP STATION SAND REMOVAL IMPROVEMENTS

CIRCUIT AND PANEL SCHEDULES

PROJECT NO.: 12–1397.222 | SCALE: AS SHOWN | DATE: OCTOBER 2016

SHEET
E–6

W:\WF\483_Murray Smith Assoc\097_Water Intake Sand Removal Improvements\001_Design\DWG\E-06.dwg Layout1 10/24/2016 2:39 PM DAVID 19.1s (LMS Tech)