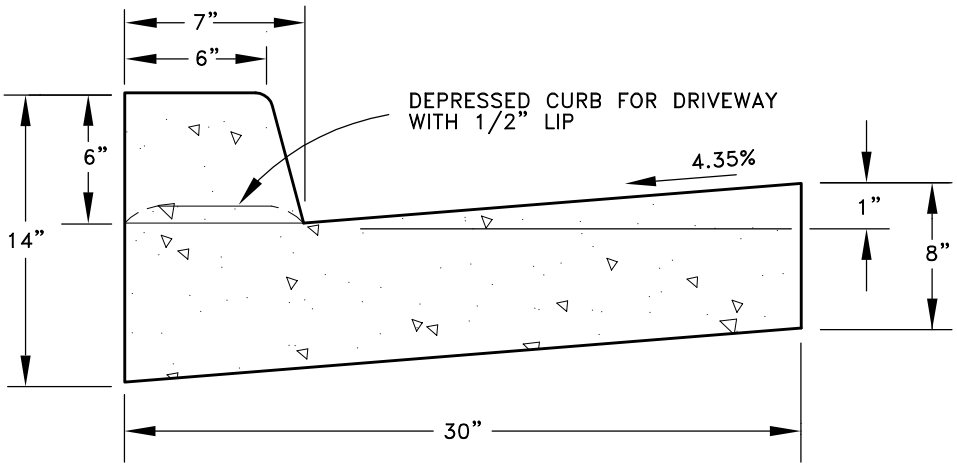

TYPICAL CURB AND GUTTER

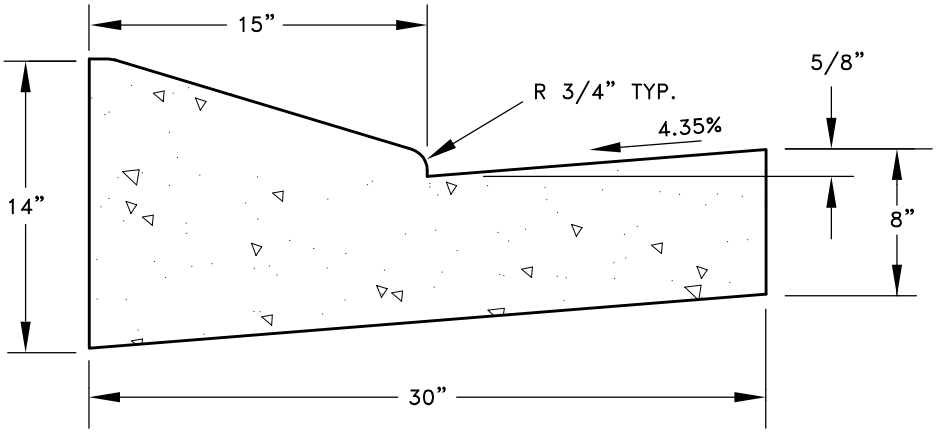

THE TRANSITION ZONE FROM TYPICAL CURB AND GUTTER TO ROLLED CURB AND GUTTER SHALL BE 12” TO 36”.

ROLLED CURB AND GUTTER
(REQUIRES APPROVAL BY THE CITY ENGINEER)

NOTES

1. STRAIGHT CURB AND ROLLED CURB SHALL NOT BE CONSTRUCTED WITHOUT THE APPROVAL OF THE CITY ENGINEER.
2. CONTRACTION JOINTS SHALL BE PLACED AT 10’ INTERVALS AND SHALL EXTEND AT LEAST 50% THROUGH THE CURB AND GUTTER. JOINTS SHALL MATCH SIDEWALK JOINTS FOR CURBSIDE SIDEWALK.
3. CONCRETE SHALL HAVE A MINIMUM 4,000 PSI 28-DAY COMPRESSIVE STRENGTH.
4. ALL RADII SHALL BE 3/4” UNLESS OTHERWISE NOTED.
5. THE STREET STRUCTURAL SECTION SHALL EXTEND TO A MINIMUM 6” BEHIND CURB.
6. WHEN CONSTRUCTING CURB ON EXISTING ASPHALT STREETS, A MINIMUM 24” WIDTH OF PAVEMENT SHALL BE SAWCUT AND REMOVED ALONG THE ENTIRE LENGTH OF NEW CURB. EXISTING ASPHALT SHALL BE REPLACED IN ACCORDANCE WITH DETAIL DWG. NO. 206 (A OR B AS APPLICABLE).
7. CURB AND GUTTER SHALL BE CONSTRUCTED INDEPENDENTLY, AND SEPARATED BY A COLD JOINT FROM ALL ADJACENT CONCRETE CONSTRUCTION; INCLUDING SIDEWALKS, DRIVEWAY RAMPS, CURB RAMPS, AND ETC.

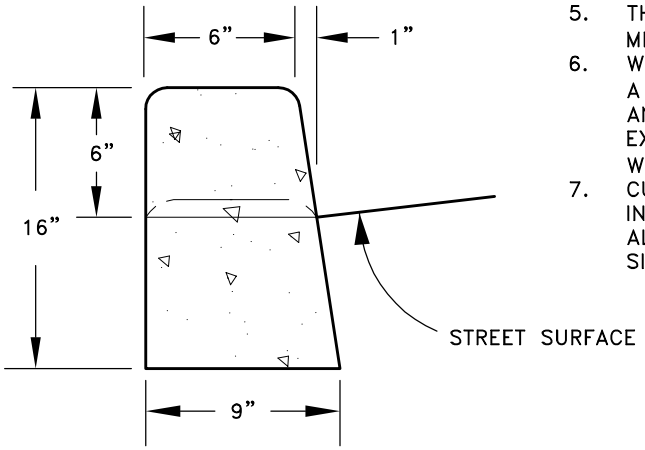

STRAIGHT CURB
(REQUIRES APPROVAL BY THE CITY ENGINEER)

CITY OF ALBANY, OREGON PUBLIC WORKS DEPARTMENT		
DETAILS FOR TYPICAL CURB AND GUTTER CONFIGURATIONS		
NO SCALE	JANUARY 2011	NO. 304