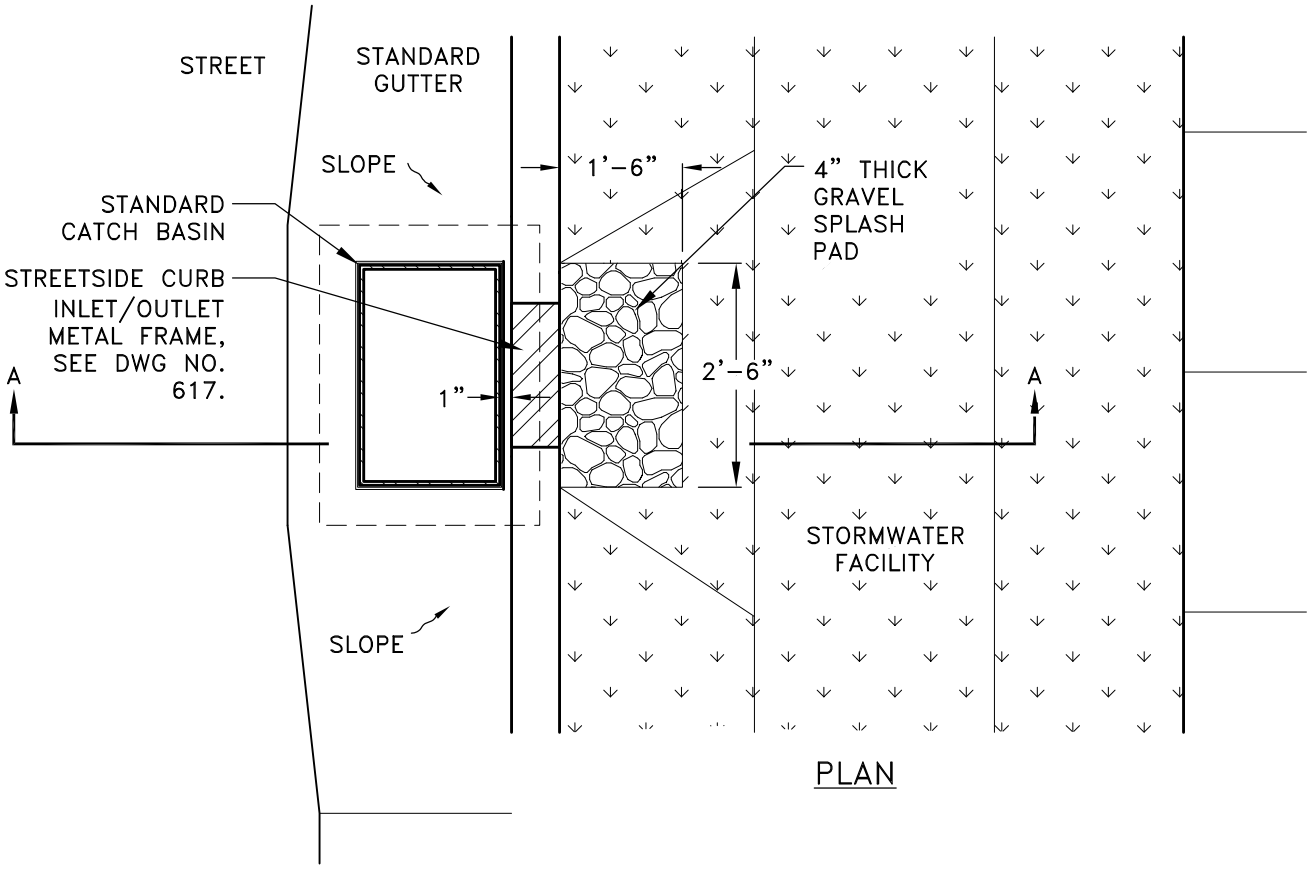

PLAN

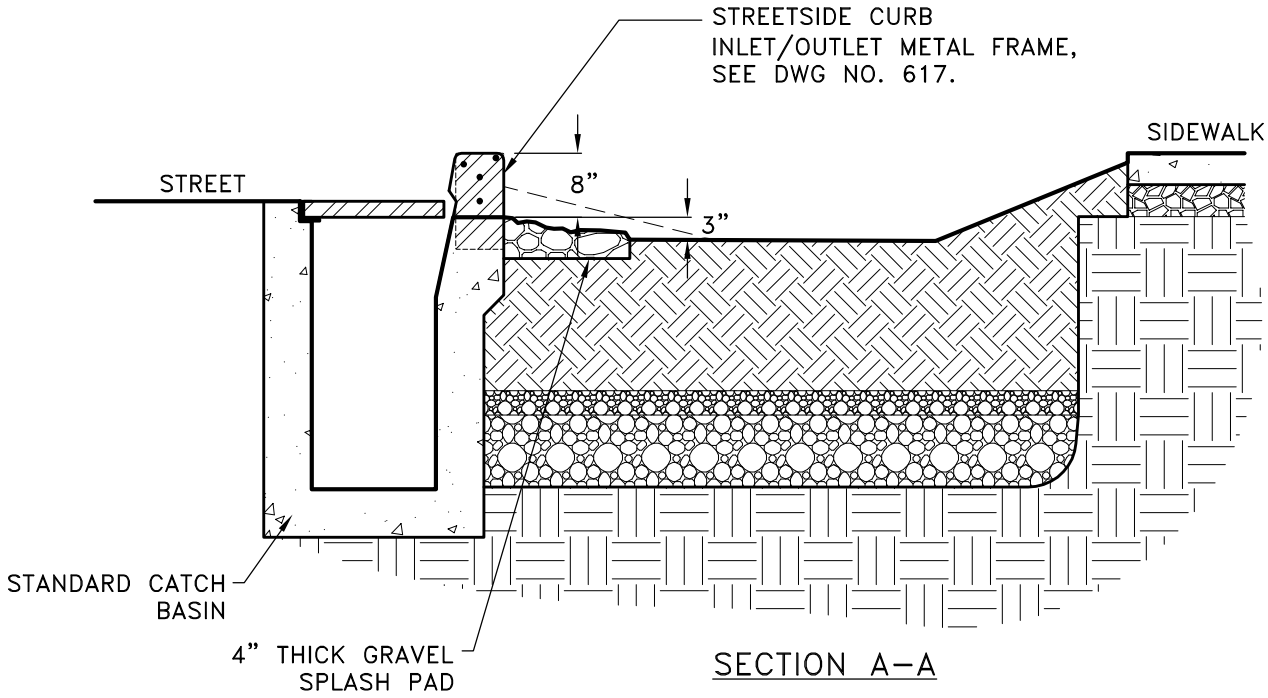

SECTION A–A

CITY OF ALBANY, OREGON PUBLIC WORKS DEPARTMENT		
CATCH BASIN SEDIMENT COLLECTOR WITH SWALE		
NO SCALE	JANUARY 2015	NO. 616B